TEXAS INSTRUMENTS

VSP2267

CCD Signal Processor with Timing Generator for Digital Cameras

Data Manual

December 2002

Mixed Signal Products

SBES001

IMPORTANT NOTICE

Texas Instruments Incorporated and its subsidiaries (TI) reserve the right to make corrections, modifications, enhancements, improvements, and other changes to its products and services at any time and to discontinue any product or service without notice. Customers should obtain the latest relevant information before placing orders and should verify that such information is current and complete. All products are sold subject to TI's terms and conditions of sale supplied at the time of order acknowledgment.

TI warrants performance of its hardware products to the specifications applicable at the time of sale in accordance with TI's standard warranty. Testing and other quality control techniques are used to the extent TI deems necessary to support this warranty. Except where mandated by government requirements, testing of all parameters of each product is not necessarily performed.

TI assumes no liability for applications assistance or customer product design. Customers are responsible for their products and applications using TI components. To minimize the risks associated with customer products and applications, customers should provide adequate design and operating safeguards.

TI does not warrant or represent that any license, either express or implied, is granted under any TI patent right, copyright, mask work right, or other TI intellectual property right relating to any combination, machine, or process in which TI products or services are used. Information published by TI regarding third-party products or services does not constitute a license from TI to use such products or services or a warranty or endorsement thereof. Use of such information may require a license from a third party under the patents or other intellectual property of the third party, or a license from TI under the patents or other intellectual property of TI.

Reproduction of information in TI data books or data sheets is permissible only if reproduction is without alteration and is accompanied by all associated warranties, conditions, limitations, and notices. Reproduction of this information with alteration is an unfair and deceptive business practice. TI is not responsible or liable for such altered documentation.

Resale of TI products or services with statements different from or beyond the parameters stated by TI for that product or service voids all express and any implied warranties for the associated TI product or service and is an unfair and deceptive business practice. TI is not responsible or liable for any such statements.

Mailing Address:

Texas Instruments
Post Office Box 655303
Dallas, Texas 75265

Copyright © 2002, Texas Instruments Incorporated

Contents

Section — Page

1 Introduction . . . 1
1.1 Description . . . 1
1.2 Features . . . 1
1.3 Block Diagram . . . 2
1.4 Terminal Assignments . . . 3
1.5 Package/Ordering Information . . . 3
1.6 Terminal Functions . . . 4
2 Theory of Operation . . . 7
2.1 Introduction . . . 7
2.2 Timing Generator (TG) . . . 7
2.3 Analog Front End . . . 11
2.4 Correlated Double Sampler (CDS) . . . 11
2.5 Input Clamp . . . 12
2.6 14-Bit A/D Converter . . . 12
2.7 Digital Programmable Gain Amplifier (DPGA) . . . 12
2.8 AFE Operating Timing . . . 13
2.9 Black-Level Clamp Loop and 10-Bit DAC . . . 14
2.10 Preblanking and Data Latency . . . 14
2.11 Power-Save Mode . . . 15
2.12 Additional Output Delay Control . . . 15
2.13 Voltage Reference . . . 15
2.14 Operating Modes . . . 15
2.15 Functions . . . 16
2.16 TG Vertical-Rate Operation . . . 16
2.16.1 Field Mode Operation . . . 16
2.16.2 Frame Mode Operation . . . 17
2.16.3 ×2 Mode Operation . . . 18
2.16.4 ×2 Monitor Mode Operation (2A, 2B CCD) . . . 19
2.17 Still Function . . . 20
2.17.1 Operation Outline . . . 20
2.17.2 Operation Sequence . . . 20
2.18 Strobe (STO Output) Function . . . 21
2.18.1 Operation Outline . . . 21
2.18.2 Operation Sequence . . . 21
2.19 Electronic Zoom Function . . . 22
2.19.1 Operation Outline . . . 22
2.19.2 Operation Sequence . . . 22
2.20 Readout Function . . . 23
2.20.1 Operation Outline . . . 23
2.20.2 Operation Sequence . . . 23
2.21 Power-Save-1 Function Explanation . . . 23
2.21.1 Operation Outline . . . 23
2.21.2 Operation Sequence . . . 23
2.22 Power-Save-2 Function Explanation . . . 23
2.22.1 Operation Outline . . . 23
2.22.2 Operation Sequence . . . 23

2.23 TG Pixel-Rate Operation . . . 24
2.23.1 High-Speed Pulse Adjustment . . . 24
2.23.2 Default Timing Value . . . 24
2.24 High-Speed Clock Timing Adjustable Range . . . 25
2.24.1 ADCCK Clock . . . 25
2.24.2 H1, H2, R Clocks . . . 26
2.24.3 SHP, SHD, PBLK, CLPOB, CLPDM Clocks . . . 27
3 Serial Interface Timing Specification . . . 29
3.1 Serial Data Format . . . 30
3.1.1 Configuration Register . . . 31
3.1.2 PGA Gain Register . . . 31
3.1.3 AFE Standby Register . . . 32
3.1.4 Operation Mode Register . . . 32
3.1.5 Function, ExtTRG, Strobe Duration Register . . . 33
3.1.6 Strobe Position Register . . . 33
3.1.7 E-Shutter Register . . . 34
3.1.8 E-Shutter, VDHD Polarity Register . . . 34
3.1.9 SUBSW Register . . . 34
3.1.10 Strobe/V-Transfer E-Zoom/SUBSW2 Register . . . 35
3.1.11 E-Zoom Register . . . 35
3.1.12 H1 Register . . . 35
3.1.13 H2 I/O Register . . . 36
3.1.14 H2 Register . . . 36
3.1.15 R I/O Register . . . 36
3.1.16 R Register . . . 36
3.1.17 SHP Register . . . 37
3.1.18 SHD Register . . . 37
3.1.19 ADCCK Register . . . 38
3.1.20 Test AFE I/O Register . . . 38
4 Timing Specification . . . 39
4.1 HD-MCLK Relation . . . 39
4.2 VD-HD Relation . . . 40
4.3 High-Speed Timing Specifications . . . 41
4.4 Horizontal Timing Chart (for 2A CCD) . . . 42
4.5 Vertical Timing Chart (for 2A CCD) . . . 43
4.6 Vertical High-Speed Transfer Timing Chart (for 2A CCD) . . . 47
4.7 Vertical Rate Timing (for 2A CCD) [field mode—odd field] . . . 48
4.8 Vertical Rate Timing (for 2A CCD) [field mode—even field] . . . 49
4.9 Vertical Rate Timing (for 2A CCD) [frame mode—odd field] . . . 50
4.10 Vertical Rate Timing (for 2A CCD) [frame mode—even field] . . . 51
4.11 Vertical Rate Timing (for 2A CCD) [×2 mode—odd field] . . . 52
4.12 Vertical Rate Timing (for 2A CCD) [×2 mode—even field] . . . 53
4.13 Vertical Rate Timing (for 2A CCD) [×2 monitor mode] . . . 54
4.14 Vertical Rate Timing (for 2A CCD) [frame mode—still function—odd field] . . . 55
4.15 Vertical Rate Timing (for 2A CCD) [frame mode—still function—even field] . . . 56
4.16 Vertical Rate Timing (for 2A CCD) [frame mode—still function turnoff] . . . 57
4.17 Vertical Rate Timing (for 2A CCD) [field mode—e-zoom function—odd field] . . . 58
4.18 Vertical Rate Timing (for 2A CCD) [field mode—e-zoom function—even field] . . . 59
4.19 Vertical Rate Timing (for 2A CCD) [×2 monitor mode—e-zoom function] . . . 60

4.20 Horizontal Timing Chart (for 2B CCD) 61
4.21 Vertical Timing Chart (for 2B CCD) 63
4.22 Vertical High-Speed Transfer Timing Chart 67
4.23 Vertical Rate Timing (for 2B CCD) [field mode—odd field] 68
4.24 Vertical Rate Timing (for 2B CCD) [field mode—even field] 69
4.25 Vertical Rate Timing (for 2B CCD) [frame mode—odd field] 70
4.26 Vertical Rate Timing (for 2B CCD) [frame mode—even field] 71
4.27 Vertical Rate Timing (for 2B CCD) [×2 mode—odd field] 72
4.28 Vertical Rate Timing (for 2B CCD) [×2 mode—even field] 73
4.29 Vertical Rate Timing (for 2B CCD) [×2 monitor mode] 74
4.30 Vertical Rate Timing (for 2B CCD) [frame mode—still function—odd field] 75
4.31 Vertical Rate Timing (for 2B CCD) [frame mode—still function—even field] 76
4.32 Vertical Rate Timing (for 2B CCD) [frame mode—still function turnoff] 77
4.33 Vertical Rate Timing (for 2B CCD) [field mode—e-zoom function—odd field] 78
4.34 Vertical Rate Timing (for 2B CCD) [field mode—e-zoom function—even field] 79
4.35 Vertical Rate Timing (for 2B CCD) [×2 monitor mode—e-zoom function] 80
5 Electrical Characteristics 81
5.1 Absolute Maximum Ratings Over Operating Free-Air Temperature Range 81
5.2 Electrical Characteristics, All Specifications at T_A = 25°C, All Power Supply Voltages = 3 V, and Conversion Rate = 20 MHz 81
6 Mechanical Data 85

List of Illustrations

Figure *Title* *Page*

2–1 VSP2267 High-Speed Clock Circuit Block Diagram 8
2–2 VSP2267 Line and Pixel Counter Circuit Block Diagram 9
2–3 VSP2267 Vertical-Rate Timing Circuit Block Diagram 10
2–4 VSP2267 AFE Simplified Block Diagram 11
2–5 CDS and Input Clamp Block Diagram 12
2–6 PGA Gain Characteristics 13
2–7 Digital PGA and Black-Level Clamp Loop Block Diagram 13

List of Tables

Table *Title* *Page*

2–1 Function Table 15

1 Introduction

1.1 Description

The VSP2267 is a complete mixed-signal IC for CCD signal processing with a CCD timing generator and A/D converter. The system synchronizes the master clock, HD, and VD. The VSP2267 supports all signal terminals that the CCD and the vertical driver require, plus externally triggered mechanical shutter and strobe functions. The R driver and H driver synchronize the A/D converter clock phase to realize ideal performance. The CCD channel has correlated double sampling (CDS) to extract image information from the CCD output signal. The digital control gain curve is linear in dB, ranging from –6 dB to 42 dB. A black-level clamping circuit ensures an accurate black reference level and quick black-level recovery after a gain change. Input signal clamping with a CDS offset adjustment function is available.

1.2 Features

The VSP2267 supports the following features:

- CCD Signal Processing:
  - Correlated Double Sampling (CDS)
  - Programmable Black-Level Clamping
- Timing Generator With R and H Drivers
- Programmable Phase Control:
  - Fine Step: 0.6 ns
  - Wide Step: 8 ns
- Programmable-Gain Amplifier (PGA): –6 dB to 42 dB Gain Range
- 12-Bit Digital Data Output:
  - Up to 25-MHz Conversion Rate
  - No Missing Codes
- Signal-to-Noise Ratio: 79 dB
- Portable Operation:
  - Low Voltage: 3.0 V to 3.6 V
  - Low Power: 138 mW at 3.0 V and 20 MHz
151 mW at 3.0 V and 25 MHz
  - Standby Plus Power-Save Mode: 34 mW
  - MCLK-Off Mode: 6 mW
- Recommended CCD: MN39470, MN39471, MN39472, MN39473, MN39474 (Panasonic)

1.3 Block Diagram

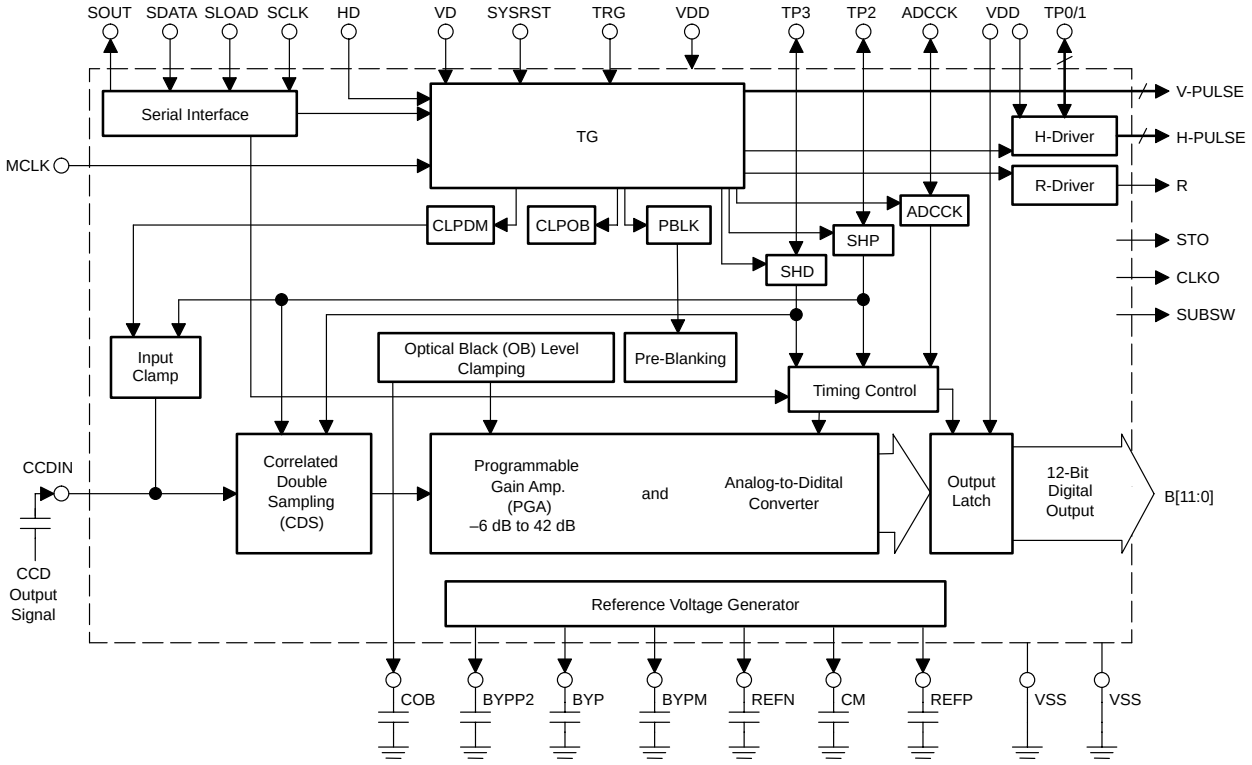

1.4 Terminal Assignments

	1	2	3	4	5	6	7	8	9	10
A	BYP2	BYP	(NC)	CCDIN	VDD	VSS	VSS	VSS	TRG	SUBSW2
B	BYPM	COB	(NC)	VDD	VSS	VDD	VDD	VDD	VSS	H1
C	CM	VDD	VSS	(NC)	VSS	MCLK	CLKO	SYSRST	VDD	VDD
D	REFP	REFN	(NC)	(NC)	(NC)	(NC)	(NC)	H2	VSS	VSS
E	VDD	VSS	VSS	(NC)			(NC)	R	SUB	VDD
F	TP3	TP2	VSS	(NC)			(NC)	(NC)	SUBSW	STO
G	VDD	(NC)	SLOAD	(NC)	(NC)	(NC)	(NC)	V2	V3	V4
H	SDATA	SCLK	B9	B6	B3	TP1	HD	(NC)	CH4	V1
J	SOUT	ADCCK	B8	B5	B1	B0	VSS	VDD	CH1	CH3
K	B11	B10	B7	B4	B2	TP0	VDD	VD	VSS	CH2

1.5 Package/Ordering Information

PRODUCT	PACKAGE	PACKAGE CODE	OPERATION TEMPERA-TURE RANGE	PACKAGE MARKING	ORDERING NUMBER	TRANSPORT MEDIA
VSP2267GSJ	BGA 96	GSJ	–25°C to 85°C	VSP2267	VSP2267GSJ	168-piece tray
					VSP2267GSJR	Tape and reel

1.6 Terminal Functions

TERMINAL NAME	TERMINAL NO.	TYPE†	DESCRIPTIONS
ADCCK	J2	DO	Clock for digital output buffer
B0	J6	DO	A/D converter output, bit 0
B1	J5	DO	A/D converter output, bit 1
B2	K5	DO	A/D converter output, bit 2
B3	H5	DO	A/D converter output, bit 3
B4	K4	DO	A/D converter output, bit 4
B5	J4	DO	A/D converter output, bit 5
B6	H4	DO	A/D converter output, bit 6
B7	K3	DO	A/D converter output, bit 7
B8	J3	DO	A/D converter output, bit 8
B9	H3	DO	A/D converter output, bit 9
B10	K2	DO	A/D converter output, bit 10
B11	K1	DO	A/D converter output, bit 11
BYP	A2	AO	Internal reference C (bypass to ground)¶
BYP2	A1	AO	Internal reference P (bypass to ground)§
BYPM	B1	AO	Internal reference N (bypass to ground)‡
CCDIN	A4	AI	CCD signal input
CH1	J9	DO	Readout pulse 1
CH2	K10	DO	Readout pulse 2
CH3	J10	DO	Readout pulse 3
CH4	H9	DO	Readout pulse 4
CLKO	C7	DO	FCK output
CM	C1	AO	A/D converter common-mode voltage (bypass to ground)¶
COB	B2	AO	Optical black clamp loop reference (bypass to ground)‡
H1	B10	DO	CCD horizontal driver 1
H2	D8	DO	CCD horizontal driver 2
HD	H7	DI	HD input
MCLK	C6	DI	Master clock input
NC	A3, B3, C4, D3, D4, D5, D6, D7, E4, E7, F4, F7, F8, G2, G4, G5, G6, G7, H8	—	
R	E8	DO	CCD reset driver
REFN	D2	AO	A/D converter negative voltage (bypass to ground)¶
REFP	D1	AO	A/D converter positive voltage (bypass to ground)¶
SCLK	H2	DI	Clock for serial-data shift
SDATA	H1	DI	Serial-data input
SLOAD	G3	DI	Serial-data latch signal
SOUT	J1	DO	Serial-data monitor out
STO	F10	DO	Strobe

† Designators in TYPE column: P–Power supply and ground, DI–Digital input, DO–Digital output, AI–Analog input, AO–Analog output

‡ Should be connected to ground with a bypass capacitor. A value of 0.1 µF to 0.22 µF is recommended; however, it depends on the application environment. See *Black Level Clamp Loop and 10-Bit DAC* (Section 2.9) for details.

§ Should be connected to ground with a bypass capacitor. A value of 400 pF to 1000 pF is recommended; however, it depends on the application environment. See *Voltage Reference* (Section 2.13) for details.

¶ Should be connected to ground with a bypass capacitor (0.1 µF). See *Voltage Reference* (Section 2.13) for details.

TERMINAL NAME	TERMINAL NO.	TYPE†	DESCRIPTIONS
SUB	E9	DO	CCD sub pulse
SUBSW	F9	DO	CCD sub bias control
SUBSW2	A10	DO	CCD sub bias control switch 2
SYSRST	C8	DI	System reset
TP0	K6	DI/O	H1
TP1	H6	DI/O	H2, R
TP2	F2	DI/O	SHP, CPOB, PBLK
TP3	F1	DI/O	SHD, CLPD
TRG	A9	DI	External trigger
V1	H10	DO	V1 pulse
V2	G8	DO	V2 pulse
V3	G9	DO	V3 pulse
V4	G10	DO	V4 pulse
VD	K8	DI	VD input
VDD	A5, B4, C2, E1	P	Analog power supply
VDD	B6, B7, B8, C9, C10, E10, G1, J8, K7	P	Digital power supply
VSS	B5, C3, C5, E2, E3	P	Analog ground
VSS	A6, A7, A8, B9, D9, D10, F3, J7, K9	P	Digital ground

† Designators in TYPE column: P–Power supply and ground, DI–Digital input, DO–Digital output, AI–Analog input, AO–Analog output

2 Theory of Operation

2.1 Introduction

The VSP2267 is a high-resolution mixed-signal IC that contains key features associated with the processing of the CCD signal in a digital still camera (DSC). The VSP2267 integrates the analog front end (AFE) and CCD timing generator (TG) with the H and R drivers.

The AFE block includes a correlated double sampler (CDS), 14-bit analog-to-digital converter (ADC), digital gain amplifier, black-level clamp loop, input clamp, CDS timing generator, and voltage reference. The built-in TG generates not only horizontal (H-rate) timing, but also vertical (V-rate) timing for several specified CCD models. Optimized timing is generated by selecting the CCD model and operating mode through the serial interface.

2.2 Timing Generator (TG)

The TG generates both H-rate timing and V-rate timing.

Figure 2–1 shows a high-speed timing block of the TG. This part generates six high-speed pulses for H-rate timing such as R, H1/H2, SHP/SHD, and ADCCK. These high-speed pulses are generated from the master clock, which has a speed of twice the pixel rate. The serial interface sets the amount of phase adjustment for these high-speed pulses in 16 steps (8 steps for R) with a minimum 0.6-ns pitch (4 steps of 0.6 ns and 4 steps of 1.2 ns for R). The power mode controls the output driver enable/disable. An on-chip decoder calculates H clear according to the CCD model and operating mode. H1, H2, and R can drive the CCD directly. The ADCCK, SHP, SHD, R, H1, and H2 pulses can select either the internal generation mode or the external supply mode.

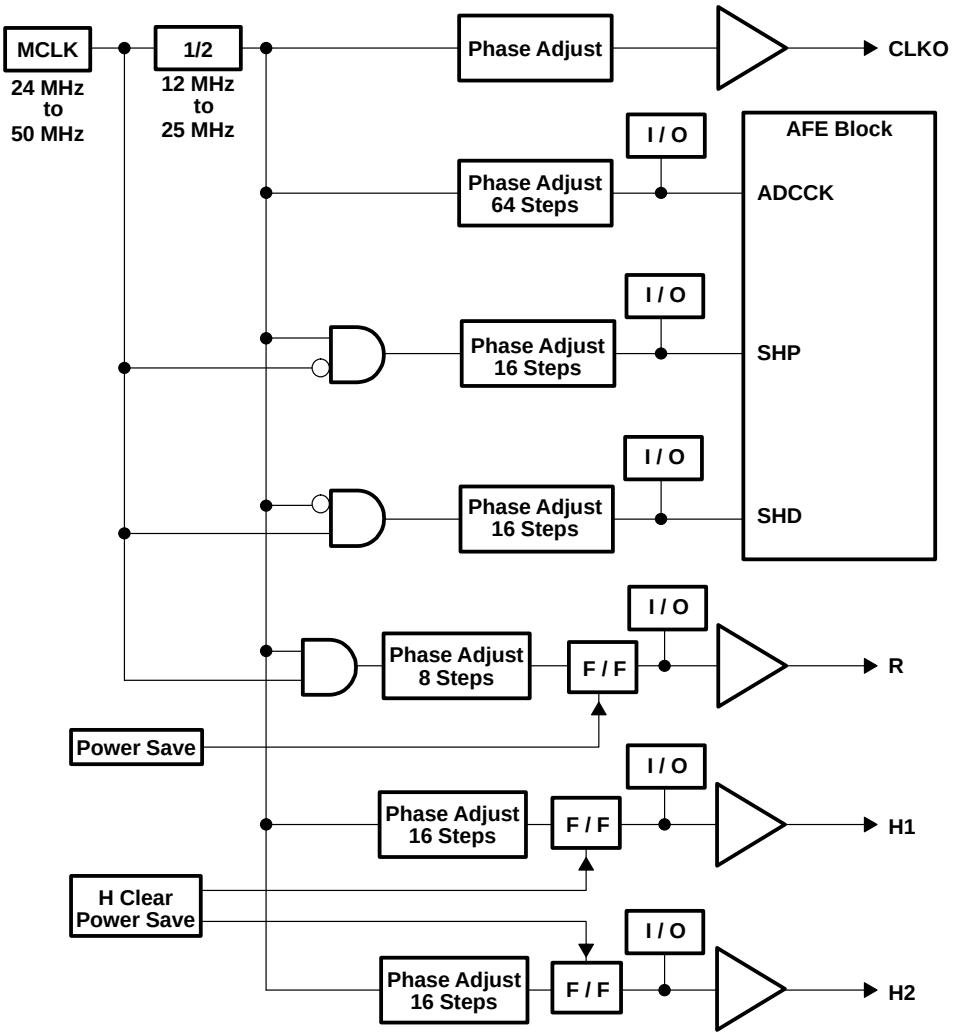

Figure 2–1. VSP2267 High-Speed Clock Circuit Block Diagram

An on-chip V-rate timing generator creates all the signals that are required for specific CCD image sensors. The TG contains the line and pixel counters used to generate V-rate timing. Figure 2–2 is the block diagram of the line and pixel counter circuit. A maximum of 2047 lines and 4095 pixels per line are supported in time scale.

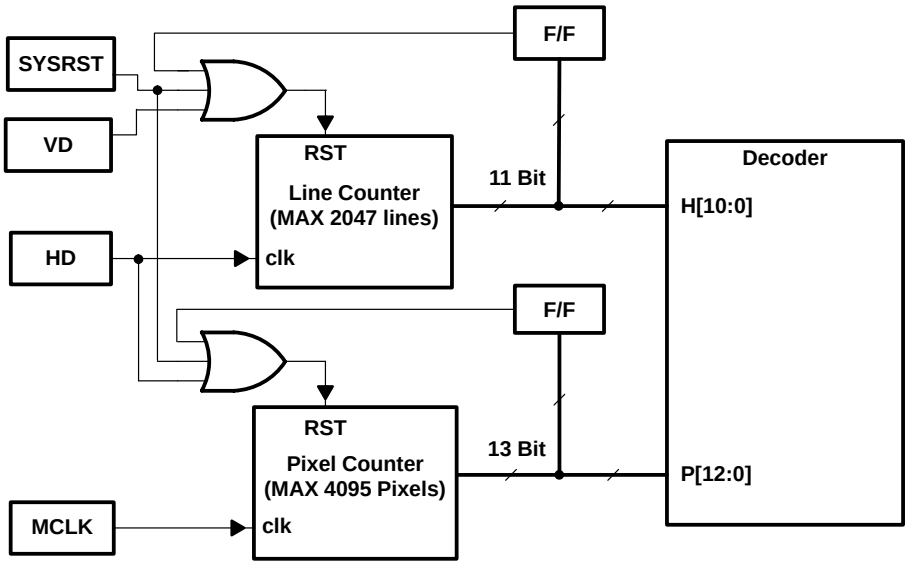

Figure 2–2. VSP2267 Line and Pixel Counter Circuit Block Diagram

Figure 2–3 shows a V-rate timing generator block diagram. By one H (horizontal line) before CCD readout, serial data transfer must be completed by the user, and data must be loaded in the registers containing CCD model, operation mode, integration time, and electronic zoom area information. Just before CCD readout, information in the registers is supplied automatically to the decoder, which generates the V-rate signal using line counter and pixel counter data. Not only the signals used for the CCD, but also the strobe light control signal is supported. CPOB, CLPD, and PBLK can select either the internal generation mode or the external supply mode.

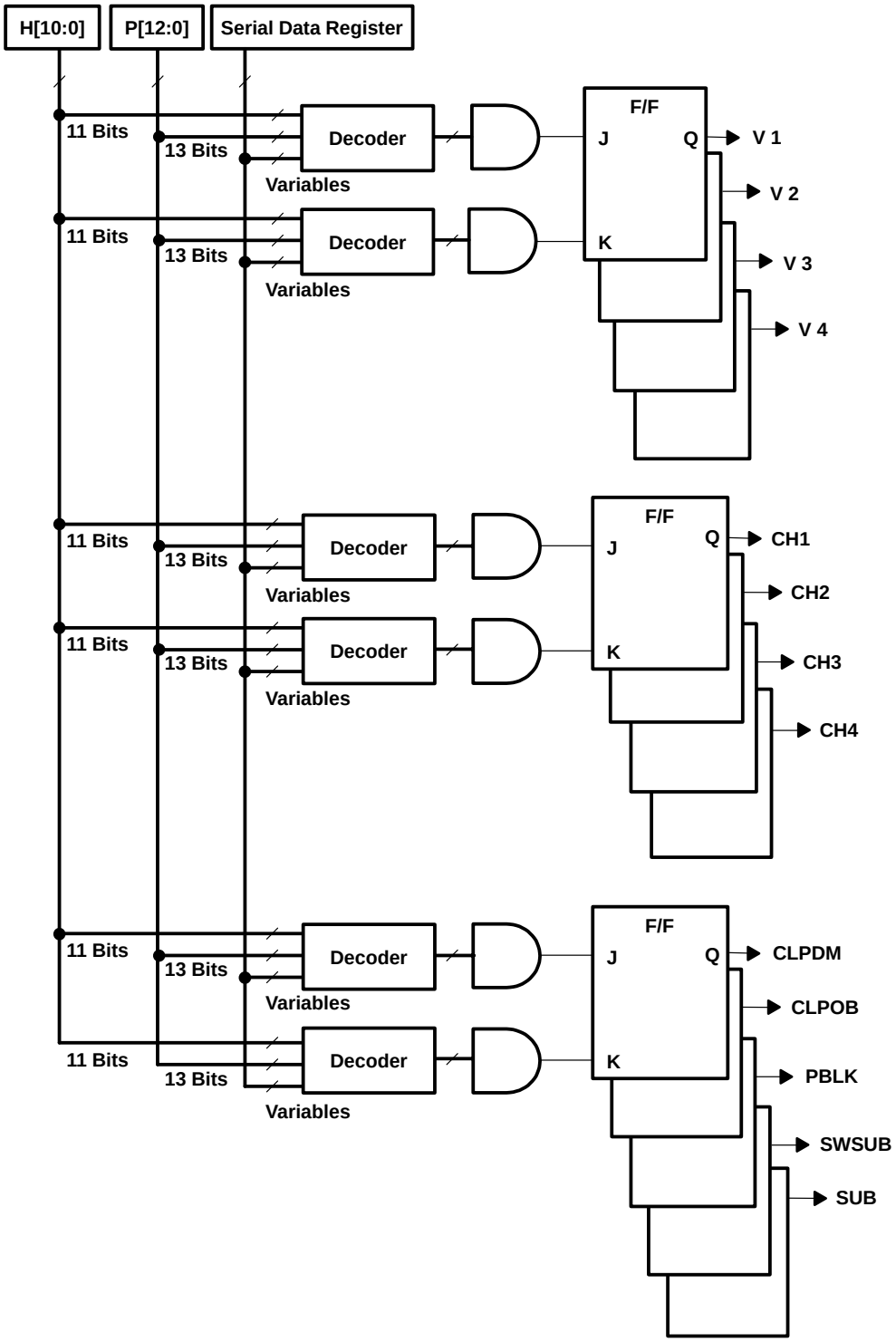

Figure 2–3. VSP2267 Vertical-Rate Timing Circuit Block Diagram

2.3 Analog Front End

Figure 2–4 shows a simplified AFE block diagram of the VSP2267. The AFE circuit includes the correlated double sampler (CDS), a 14-bit analog-to-digital converter (ADC), digital gain amplifier, black-level clamp loop, input clamp, CDS timing generator, and voltage reference. An off-chip emitter-follower buffer or preamplifier is needed between the CCD output and the VSP2267 CCDIN input.

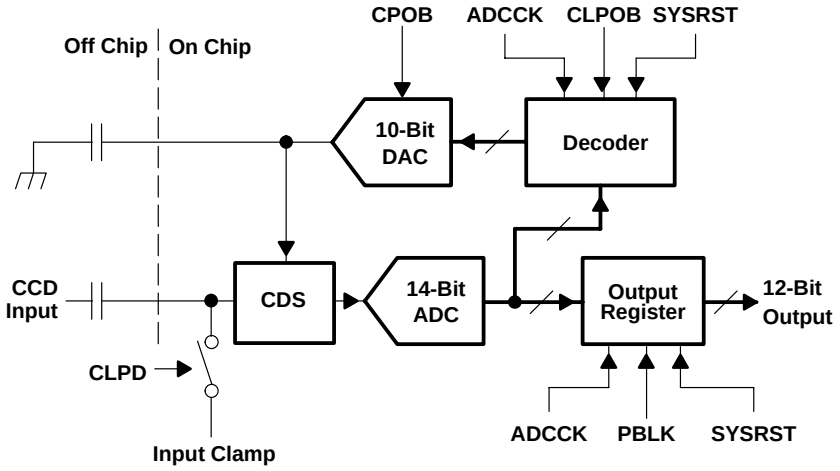

Figure 2–4. VSP2267 AFE Simplified Block Diagram

2.4 Correlated Double Sampler (CDS)

The output signal of a CCD image sensor is sampled twice during one pixel period: once during the reference interval and again during the data interval. Subtracting these two samples extracts the video information of the pixel and removes noise which is low frequency—the kTC and CCD reset noise. Figure 2–5 is a block diagram of the CDS.

The CDS is driven through an off-chip coupling capacitor $C_{IN.}$ (A 0.1-µF capacitor is recommended for C_{IN}). AC coupling is highly recommended because the dc level of the CCD output signal is usually too high (several volts) for the CDS to work properly. The appropriate common-mode voltage for the CDS is around 0.5 V–1.5 V. The reference-level sampling is performed while SHP is active, and the voltage level is held on sampling capacitor C_1 at the trailing edge of SHP. The data-level sampling is performed while SHD is active, and the voltage level is held on sampling capacitor C_2 at the trailing edge of SHD. Then the subtraction of the two levels is performed by the switched-capacitor amplifier. The off-chip emitter follower or equivalent buffer must be able to drive more than 10 pF because the 10-pF sampling capacitor is seen at the input terminal. (Usually additional stray capacitance of a few pF is present.) The analog input signal range of the VSP2267 is about 1 Vp-p.

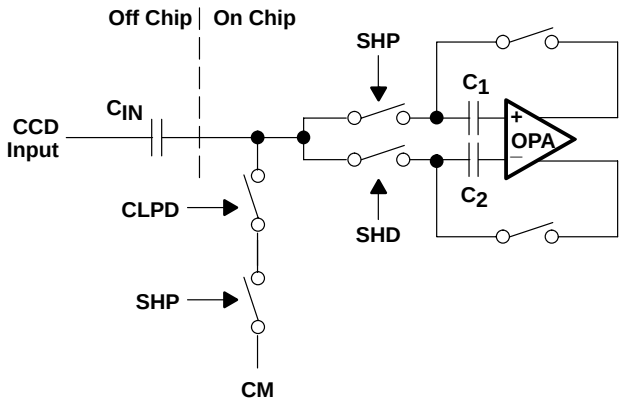

Figure 2–5. CDS and Input Clamp Block Diagram

2.5 Input Clamp

The buffered CCD output is capacitively coupled to the VSP2267. The input clamp restores the dc component of the input signal which was lost with the ac coupling and establishes the desired dc bias point for the CDS. Figure 2–5 also shows the block diagram of the input clamp. The input level is clamped to the internal reference voltage CM (1.5 V) during the dummy pixel interval. More specifically, the clamping function becomes active when both CLPD and SHP are active.

2.6 14-Bit A/D Converter

The ADC uses a fully differential pipelined architecture of 1.5 bits per stage, which is well-suited for low-power, low-voltage, and high-speed applications. The ADC provides 14-bit resolution for the entire scale. The 1.5-bit-per-stage structure of the ADC is advantageous in realizing better linearity for a smaller signal level. Improved linearity occurs because large linearity errors tend to occur at specific points in the full scale and the linearity improves for a signal level below any such specific point.

2.7 Digital Programmable Gain Amplifier (DPGA)

Figure 2–6 shows the characteristics of the DPGA gain. The DPGA provides a gain range of –6 dB to 42 dB, which is linear in dB. The gain, controlled by a digital code with 10-bit resolution, can be set through the serial interface; see the *Serial Interface Timing Specification* (Section 3) for details. The default value of the gain control code is 128 (PGA gain = 0 dB).

After powering on, the gain control value is undetermined. For this reason, it must be set to an appropriate value by using the serial interface or reset to the default value by strobing the SYSRST terminal.

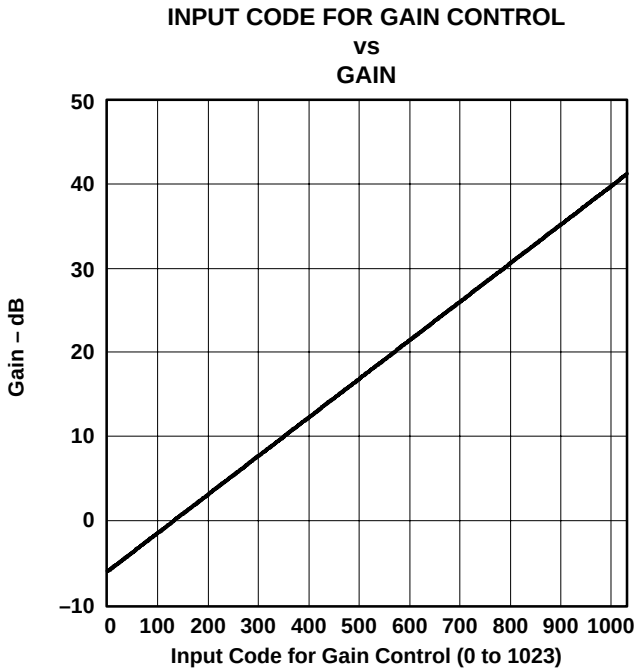

Figure 2–6. PGA Gain Characteristics

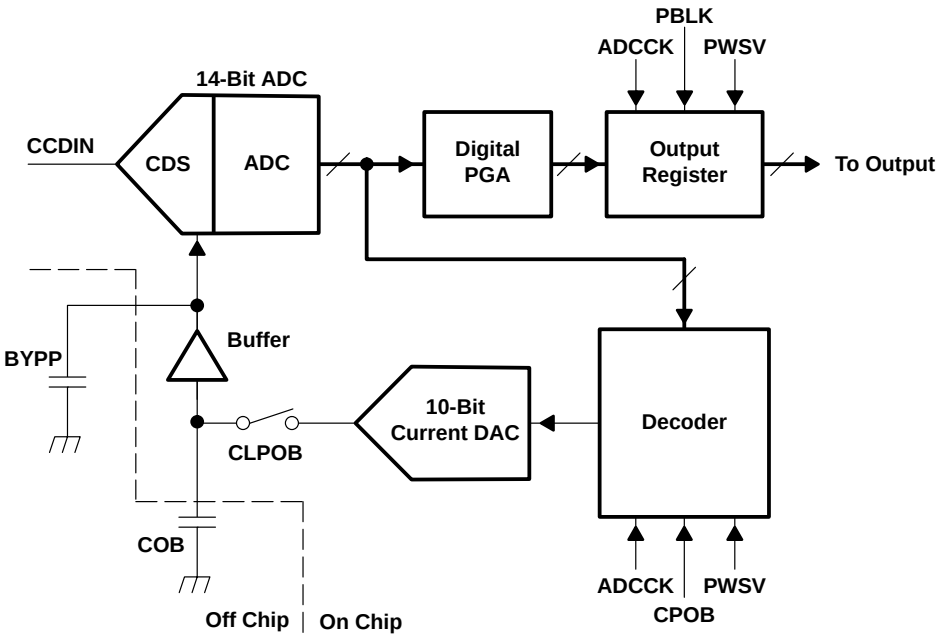

Figure 2–7. Digital PGA and Black-Level Clamp Loop Block Diagram

2.8 AFE Operating Timing

The CDS and the ADC are operated by SHP, SHD, and their derivative timing clocks generated by the internal on-chip timing generator. The DPGA output register and decoder are operated by ADCCK. The digital output data is synchronized with ADCCK. The timing relationship between the CCD signal, SHP, SHD, ADCCK, and the output data is shown in the VSP2267 timing specification. CPOB activates the black-level clamp loop during the OB pixel interval and CLPD activates input clamping during the dummy pixel interval.

2.9 Black-Level Clamp Loop and 10-Bit DAC

To extract the video information correctly, the CCD signal must be referenced to a well-established black level. The VSP2267 has an auto-zero loop (calibration loop) to establish the black level using the CCD optical black (OB) pixels. Figure 2–7 shows the block diagram of this loop. The input signal level from the OB pixels is identified as the real black level, and the loop is closed during this period (actually during the period while CPOB = ACTIVE). While the auto-zero loop is closed, the difference between the ADC output code is evaluated and applied to the decoder, which then controls the 10-bit current DAC. The current DAC can charge or discharge the external capacitor at COB, depending on the sign of the code difference. The loop adjusts the voltage at COB, which sets the offset of the CDS to make the code difference zero. Thus the ADC output code converges to black level during CPOB = ACTIVE and maintains the black level derived from the OB pixels after the loop has converged. CPOB performs the OB clamping of both channels simultaneously.

To determine the loop time constant, an off-chip capacitor is required and should be connected to the COB terminal. The time constant T is calculated using the following equation:

$$T = \frac{C}{(16384 \times I_{MIN})} \tag{1}$$

where C is the capacitor value connected to COB, I_{MIN} is the minimum current (0.15 µA) of the control DAC in the OB level clamp loop, and 0.15 µA is equivalent to 1 LSB of the DAC output current. When C is 0.1 µF, then the time constant T is 40.7 µs for the ADC output code from 0 LSB to 1543 LSB (The convergence curve becomes exponential).

For the output code above 1543 LSB, the current DAC injects constant (maximum) current into the capacitor and the convergence curve becomes linear. The slew rate SR is calculated using the following equation.

$$SR = \frac{I_{MAX}}{C} \tag{2}$$

where C is the capacitor value connected to COB. I_{MAX} is the maximum current (153 µA) of the control DAC in the OB level clamp loop, and 153 µA is equivalent to 1023 LSB of the DAC output current.

Generally, OB level clamping at high speed causes clamping noise. However, the noise can be reduced by making C large. On the other hand, a large C requires a much longer time to restore from the power-save mode or right after the power goes ON. Therefore, 0.1 µF to 0.22 µF is considered a reasonable value for C. If the application environment requires a value outside this range, making careful adjustments by the trial-and-error method is recommended.

The OB clamp level (the pedestal level) is programmable through the serial interface; see the *Serial Interface Timing Specification* (Section 3) for details. Also see the *Serial Interface Timing Specification* section for the relationship between input code and the OB clamp level.

The black-level clamp loop not only eliminates the CCD black-level offset, but also eliminates the offsets of the VSP2267 CDS and ADC themselves.

2.10 Preblanking and Data Latency

The VSP2267 has a preblanking function. When PBLK = LOW, the digital outputs all become zero at the ninth rising edge of ADCCK, counting from the time when PBLK becomes LOW, to accommodate the clock latency of the VSP2267.

Data latency of this device is seven clock cycles. The digital output data come out on the rising edge of ADCCK with a delay of seven clock cycles.

Some CCDs have a large transient output signal during blanking intervals. If the input voltage is higher than the supply rail or lower than the ground rail by 0.3 V, then protection diodes are turned on, limiting the input voltage. Such a high-swing signal can cause device damage to the VSP2267 and should be avoided.

2.11 Power-Save Mode

For the purpose of power savings, the VSP2267 can be put into the standby plus power-save mode by serial interface command. In this mode, all the function blocks are disabled, the A/D outputs all go to zero and the TG output goes to high or low status by configuration of the serial interface command. The current consumption drops to 34 mA. Because all the bypass capacitors discharge during this mode, a substantial time (usually of the order of 200–300 ms) is required to restore from the standby plus power-save mode.

2.12 Additional Output Delay Control

The VSP2267 can control the delay time of output data by setting registers through the serial interface. In some cases, the transition of output data affects analog performance. Generally, this is avoided by adjusting the timing of ADCCK. In case the ADCCK timing cannot be adjusted, the additional output delay control is effective for reducing the influence of transient noise. Refer to the *Serial Interface Timing Specification* (Section 3) for details.

2.13 Voltage Reference

All the reference voltages and bias currents used on the device are created from internal band-gap circuitry.

The CDS and the ADC mainly use three reference voltages, REFP (1.75 V), REFN (1.25 V) and CM (1.5 V). REFP and REFN are buffered on-chip. CM is derived as the midvoltage of the resistor chain connecting REFP and REFN internally. The ADC full-scale range is determined by twice the voltage difference between REFP and REFN.

REFP, REFN, and CM should be heavily decoupled with appropriate capacitors.

Table 2–1. Function Table

FUNCTION	OPERATION MODE							
	2A CCD†				2B CCD‡			
	FIELD	FRAME	×2 SPEED	×2 MONITOR	FIELD	FRAME	×2 SPEED	×2 MONITOR
LONG INTEGRATION (CHDEL)	√	√	√	√	√	√	√	√
POWER SAVE (PWSV)	√	√	√	√	√	√	√	√
STROBE (STRB)	√	√	√	√	√	√	√	√
STILL (STIL)	√	√	√	√	√	√	√	√
E-ZOOM (EZOOM)	√	√	√	√	√	√	√	√
E-SHUTTER	√	√	√	√	√	√	√	√
SUB STOP 1/4-STEP	√	√	√	√	√	√	√	√

† Recommended CCD MN39470, MN39472, MN39473 (Panasonic)
‡ Recommended CCD MN39471, MN39474 (Panasonic)

2.14 Operating Modes

- Field mode enables the summation of vertically neighboring pixels.
- Frame mode enables each pixel output.
- ×2 speed mode enables output interval lines.
- ×2 monitor mode enables output of two by eight lines or two by ten lines for CCDs 2A or 2B, respectively.

The field mode, frame mode, and ×2 speed mode operate with interlace between even/odd frames.

2.15 Functions

- The long integration function stops CCD readout (CH1, CH2, CH3, CH4 pulse) at the end of one frame, as defined by the serial data instruction.
- The power save function stops all clocks and preserves high or low levels by the serial data instruction.
- The strobe function enables external strobe light operation to synchronize electronic shutter timing by the serial data instruction.
- The e-zoom function enables electronic zoom, by which successive lines are selected according to the serial data instruction.
- The e-shutter function enables electronic shutter operation by the serial data instruction.
- The SUB-stop 1/4-step function enables selection by the serial data instruction of the SUB pulse position from among four points on a line.

2.16 TG Vertical-Rate Operation

2.16.1 Field Mode Operation

2.16.1.1 Operation Outline

Horizontal output of the CCD is generated by summing pixels that are vertically adjacent to each other, and successively repeating the summation for each CCD pixel column. Either the odd field or the even field is selectable.

2.16.1.2 Operation Sequence

1. Set serial data address 000100 bits 6–5 = 00.
2. Define odd/even by the relation of VD and HD or by serial address 000100 bits 8–7.

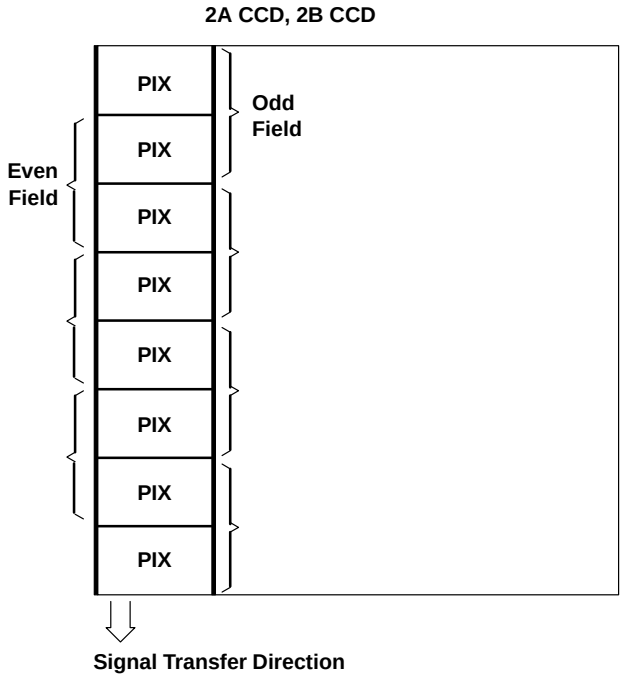

2.16.2 Frame Mode Operation

2.16.2.1 Operation Outline

Horizontal output of the CCD is generated by reading out individual pixels vertically at 2-pixel intervals, and successively repeating the readout for each pixel column. Either the odd field or the even field is selectable.

2.16.2.2 Operation Sequence

1. Set serial data address 000100 bits 6–5 = 01.
2. Define odd/even by the relation of VD and HD or by serial address 000100 bits 8–7.

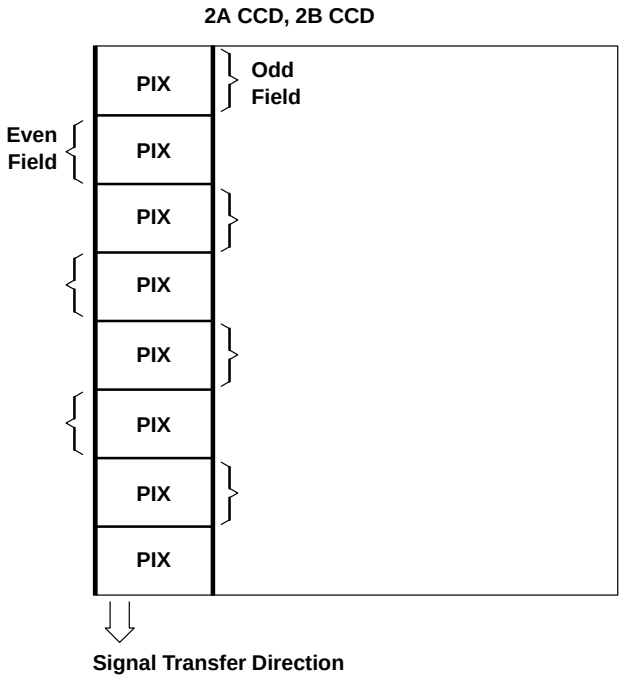

2.16.3 ×2 Mode Operation

2.16.3.1 Operation Outline

Horizontal output of the CCD is generated by summing pixels vertically in groups of two at 4-pixel intervals, and successively repeating the readout for each pixel column. Either the odd field or the even field is selectable.

2.16.3.2 Operation Sequence

1. Set serial data address 000100 bits 6–5 = 10.
2. Define odd/even by the relation of VD and HD or by serial address 000100 bits 8–7.

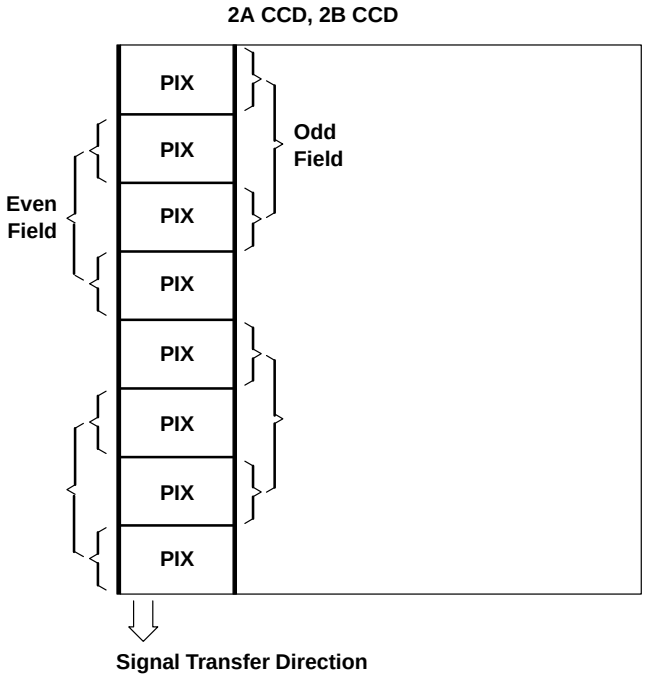

2.16.4 ×2 Monitor Mode Operation (2A, 2B CCD)

2.16.4.1 Operation Outline

(2A CCD) Horizontal output of the CCD is generated by summing pixels vertically in groups of two, and successively repeating the readout for each pixel column.The third and eighth of every eight consecutive vertical pixels are selected for summing.

(2B CCD) Horizontal output of the CCD is generated by summing pixels vertically in groups of two, and successively repeating the readout for each pixel column. The fifth and tenth of every ten consecutive vertical pixels are selected for summing.

2.16.4.2 Operation Sequence

1. Set serial data address 000100 bits 6–5 = 11.
2. Operation proceeds without regard for odd-/even-field considerations.

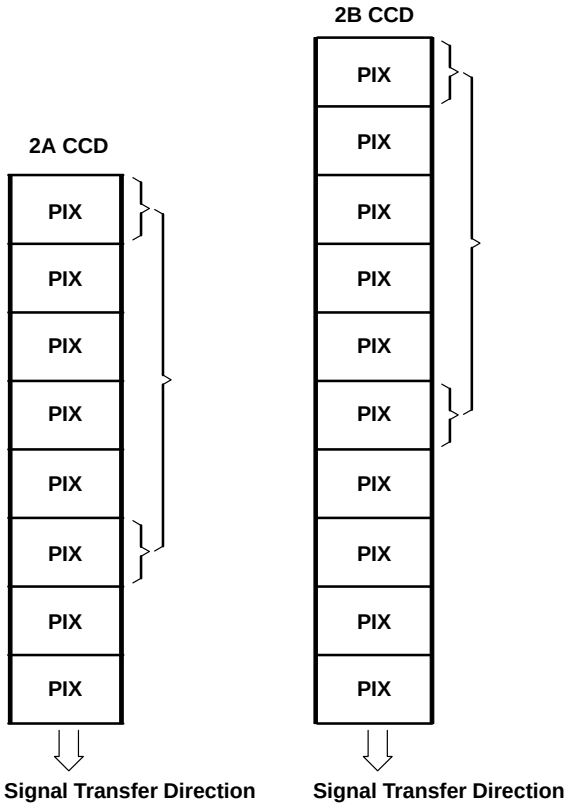

2.17 Still Function

2.17.1 Operation Outline

Readout timing is selected by the TRG input. Smear dump operation, which is synchronized to the mechanical shutter, is available.

SUB output is controlled by using both the serial data instruction and the external TRG signal.

The SUBSW level follows the still mode condition. SUBSW can be used for the SUB bias control circuit when using a mechanical shutter. It is recommended to set the toggling position of SUBSW after the mechanical shutter has closed.

2.17.2 Operation Sequence

1. Set the serial data address 000101.
   Input bit 2 = H, and set to the still mode.
   Select the trigger signal EDGSL bit 3 = L for VD or bit 3 = H for TRG.
   Select the SUB output STLSUB bit 4 = L for TRG input or bit 4 = H for serial data input.

   (In this case, the SUB output is defined by the TRG input. To use the serial data instruction, the integration time is defined by ES 000111, which can be done after Step 2, following.)
2. Input a pulse to SLOAD and send the serial data.
3. Set the serial data address 001010. Input the STVV data in bits 0–5 for SUBSW rise time definition. Data is stored in the register 1 H before a readout operation. Upon going to still mode, during the horizontal scan time preceding a readout operation, a SUB output is made for every H and charge is drained.
4. Input a TRG falling edge signal if necessary. The TRG falling edge is latched by the internal HD_flg. The SUB output goes high after the next horizontal blank, and charge integration starts. See Note 1.
5. Input a TRG rising edge or VD signal. SUBSW goes high at the position defined by the serial data. The SUBSW toggling position is determined by counting the number of HD pulses after the rising edge of TRG or VD. A vertical high-speed pulse, which is more than the the line number of one field, is applied.
6. Input serial data to set bit 3 = L at address 000101 and release the the trigger-select function during the vertical high-speed pulse operation that was initiated in Step 5.
7. Input a VD pulse after one field of CCD output signal has completed, keeping SUBSW high.
8. Input serial data for address 000101 and bit 2 = L to exit from the still mode.
9. Input a VD pulse after one field of CCD output signal has completed. SUBSW goes low at the next HD rising edge.

   NOTES:
   1. In this mode, the mechanical shutter was open while the TRG input was low.
   2. Do not use the electronic shutter in the still mode, when SUBSW is high.
   3. For the VD-to-VD interval, more than 90 counts of the HD-to-HD interval are required.

2.18 Strobe (STO Output) Function

2.18.1 Operation Outline

STO output is initiated by the serial data instruction, which includes the STO signal position and duration.

2.18.2 Operation Sequence

1. Set data bit 6 = H at address 001010 for the STO (strobe) rising point instruction. See Note 1.
2. Input a pulse to SLOAD and transfer the serial data.
3. Set data bits 0–9 at address 000110 for the STO (strobe) rising point instruction. In this case, use the binary code for data ST[9:0] starting from the HD rising edge (10 T), which is 2 H after the readout pulse. The data range of ST is $0 \leq n1 \leq A–2$, where A is the number of HD between VD–VD. See Note 3.
4. Input a pulse to SLOAD and transfer the serial data.
5. Set data bits 5–9 at address 000101 for the SWT duration instruction. In this case, use the binary code for data SWT[9:5], starting from the STO rising edge (10 T). See Note 3.
6. Input a pulse to SLOAD and transfer the serial data. Data is stored into the resistor at 1 H before the readout operation. STO goes high at the point determined by the serial data instruction. STO goes low when the duration of the STO high level extends beyond SWT in the interval between two HD pulses. See Note 2.

   NOTE:
   1. The strobe function can be used in the normal mode as well as in the still mode. Then strobe operation is useful for red-eye prevention.
   2. Rise time and fall time of STO are 10 T.
   3. Adjust the STO position and width so that STO goes low 2 HD before the readout operation.

2.19 Electronic Zoom Function

2.19.1 Operation Outline

- Vertical CCD transfer enables vertical image extraction.
- Horizontal image extraction and the zooming process require signal processing outside this device.
- This mode enables high-speed image output of a limited area.

2.19.2 Operation Sequence

1. Set serial data address 000101. At the same time, input data bit 1 = H, and set the electronic zoom mode. Set the number of transfer stage using binary address 001011 and code in data bits 0–9. See Note 4 for the data range. See Notes 1–5.
2. Input a pulse to SLOAD and transfer the serial data. According to serial data stage instruction, a high-speed vertical transfer of V1 to V4 output is made. After the high-speed transfer, a standard vertical transfer of V1 to V4 is made for each H. At the next VD, high speed vertical transfer of V1 to V4 is output for approximately one field. See Note 2.

   NOTE:

   1. This mode can not be combined with still mode.
   2. In the electronic zoom function, the user instruction pertains only to a vertical high-speed transfer following a readout operation. The number of vertical high-speed transfers preceding a readout operation is fixed for each CCD model.
   3. Signal performance is not assured during 1 field after a change to this mode and release from this mode.
   4. Transfer stage setting is as follows:

      [2A CCD]

      $0 \leq n \leq 640$ stages (0.5 stage pitch is available by odd/even select)

      Note that n must be divided by 2.

      [2B CCD]

      $0 \leq n \leq 610$ stages (0.5 stage pitch is available by odd/even select)

      Note that n must be divided by 5.
   5. The interval between VD to VD must be more than 90 HD.

2.20 Readout Function

2.20.1 Operation Outline

This mode can control a pair of pixels, which are mixed in the vertical transfer CCD. Control is not accomplished by the HD–VD phase, but by the serial data instruction.

2.20.2 Operation Sequence

1. Set serial data address 000100. At the same time, input data bit 7 = H and set the serial data control mode. In this case, readout timing is defined by bit-8 data. When bit 8 = L, the odd field is read out; when bit 8 = H, the even field is read out.
2. Input a pulse to SLOAD and send the serial data.

   NOTE:
   If bit 7 = L, odd/even readout recognition is made by the HD–VD phase difference.

2.21 Power-Save-1 Function Explanation

2.21.1 Operation Outline

Power save by stopping	H1, R, V3, V4, CH1, CH2, CH3, CH4, SUB, SHP, SHD, CPOB, CLPDM, PBLK = Fixed high H1, ADCCK, V1, V2 = Fixed low

2.21.2 Operation Sequence

1. Set serial data 000100. Set data bit PWSV1 = H to enter the power-save mode.
2. Input a pulse for SLOAD and transfer the serial data.

   NOTES:
   1. After release from this mode, signal performance is not assured during 1 V.
   2. Do not use both power-save modes 1 and 2 at the same time.

2.22 Power-Save-2 Function Explanation

2.22.1 Operation Outline

Power save by stopping H1, H2, R, SHP, SHD, ADCCK, V1–V4, CH1–CH4, SUB, CPOB, CLPDM, PBLK.

2.22.2 Operation Sequence

(same as power-save-1 function)

NOTES:
(same as power-save-1 function)

2.23 TG Pixel-Rate Operation

2.23.1 High-Speed Pulse Adjustment

For a high-speed pulse, the CCD signal sampling time is adjustable (see serial data addresses from 001100 to 010110). The default value is set as follows.

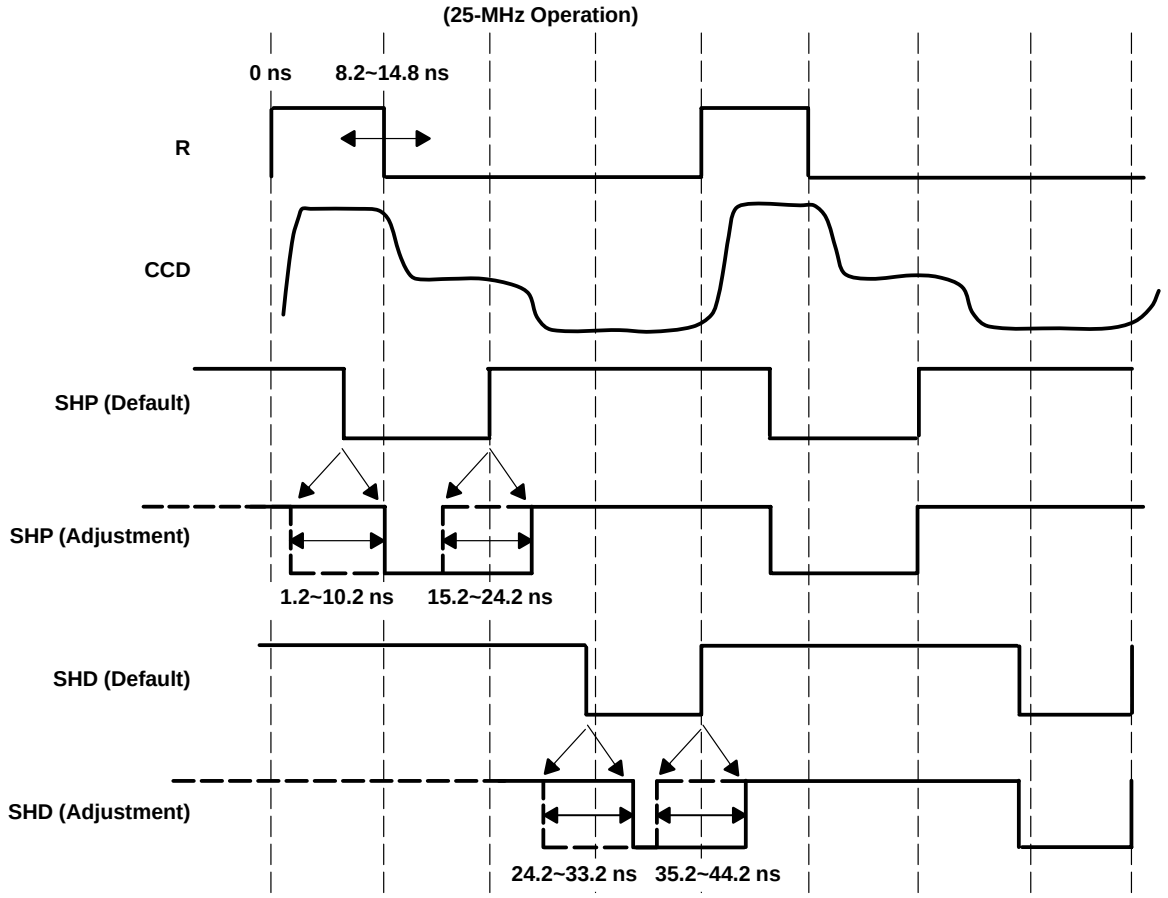

2.23.2 Default Timing Value

- R: Standard reset duration is 25% of cycle.
- SHP: Standard rise point is 50% of cycle, based on a 3-ns CCD signal delay. Actual delay depends on the system.
- SHD: Standard rise point is 100% of cycle, based on a 3-ns CCD signal delay. Actual delay depends on the system.
- H1: Standard duration is 50% of cycle.
- H1 and H2 are complementary. The crossover point of the H1 rising edge and H2 falling edge should be higher than VDD/2.
- H2: Standard duration is 50% of cycle.
- ADCCK: Standard rise and fall points are 25% and 75% of cycle respectively, based on a 3-ns CCD signal delay.

2.24 High-Speed Clock Timing Adjustable Range

The timing reference for the values in the following table is the R pulse rising edge.

		25-MHz OPERATION			20-MHz OPERATION			12-MHz OPERATION			NOTE
TERMINAL	EDGE	MIN	STD	MAX	MIN	STD	MAX	MIN	STD	MAX	
R	Rising	0	0	0	0	0	0	0	0	0	0%
	Falling	8.2	10	14.8	10.7	12.5	17.3	19.0	20.8	25.6	25%
SHP	Rising	15.2	20	24.2	20.2	25	29.2	36.9	41.7	45.9	50%
	Falling	1.2	6	10.2	6.2	11	15.2	22.9	27.7	31.9	14 ns
SHD	Rising	35.2	40	44.2	45.2	50	54.2	78.5	83.3	87.5	100%
	Falling	24.2	29	33.2	34.2	39	43.2	67.5	72.3	76.5	11 ns
H1	Rising	–4.2	0	4.8	–4.2	0	4.8	–4.2	0	4.8	0%
	Falling	15.8	20	24.8	20.8	25	29.8	37.5	41.7	46.5	50%
H2	Rising	15.8	20	24.8	20.8	25	29.8	37.5	41.7	46.5	50%
	Falling	–4.2	0	4.8	–4.2	0	4.8	–4.2	0	4.8	0%
ADCCK (phase 00)	Rising	3.6	6	12.6	7.1	9.5	16.1	15.1	17.5	24.1	25%
	Falling	23.6	26	32.6	32.1	34.5	41.1	56.7	59.1	65.7	75%

2.24.1 ADCCK Clock

Signal monitoring is available using the ADCCK I/O terminal. External input is available via the serial data instruction.

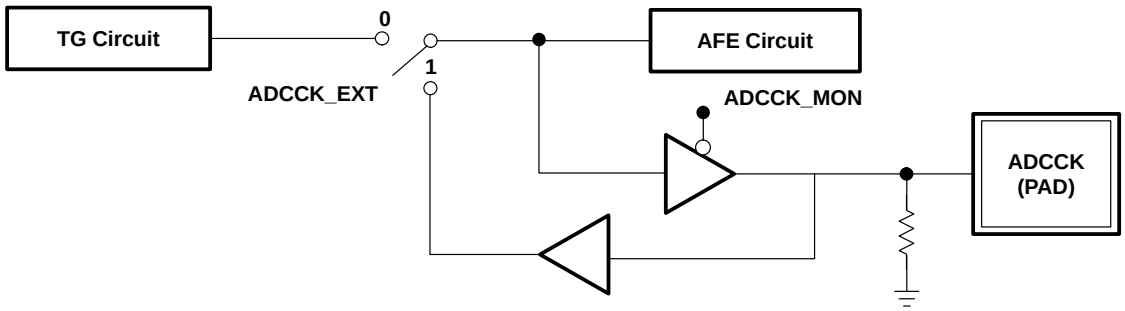

2.24.2 H1, H2, R Clocks

Signal monitoring and signal input (H1, H2, R) are available using the corresponding I/O terminal.

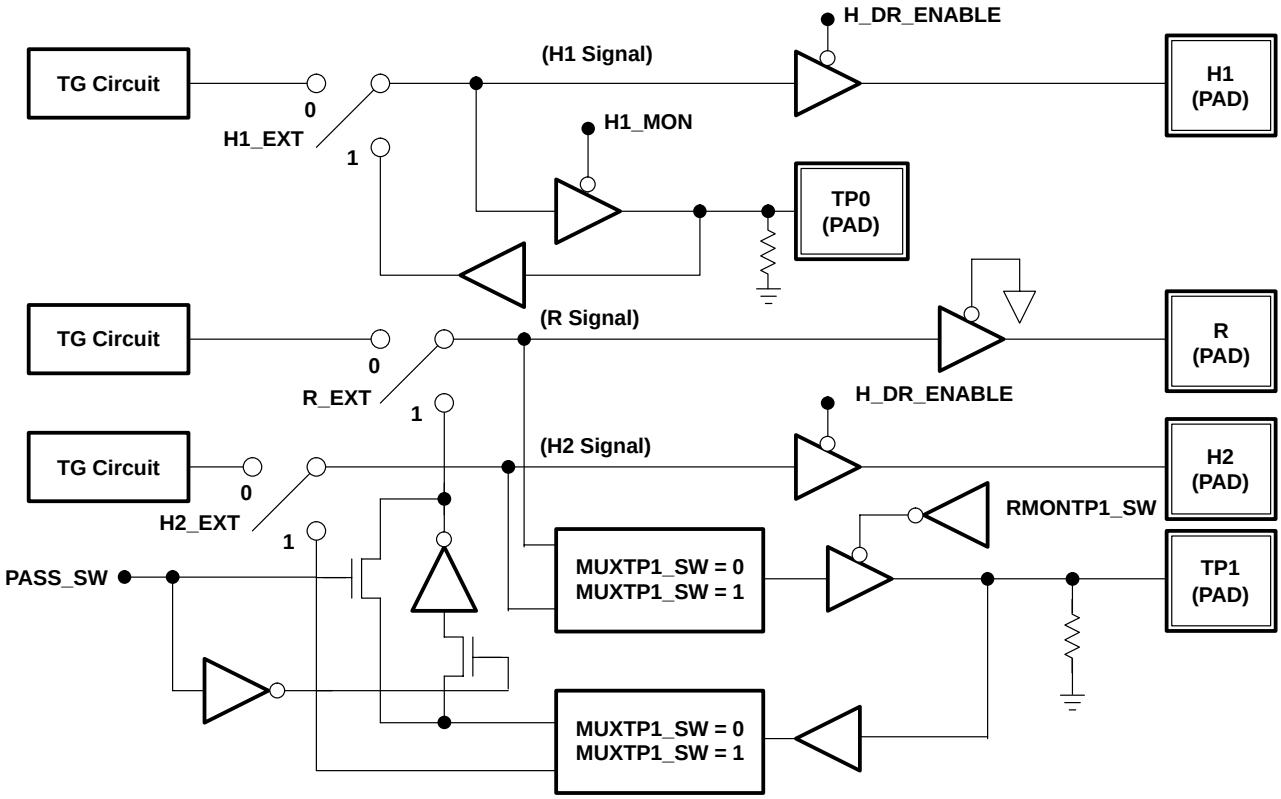

2.24.3 SHP, SHD, PBLK, CLPOB, CLPDM Clocks

Signal monitoring and signal input for SHP, SHD, PBLK, CLPOB, and CLPDM are available using the corresponding I/O terminal.

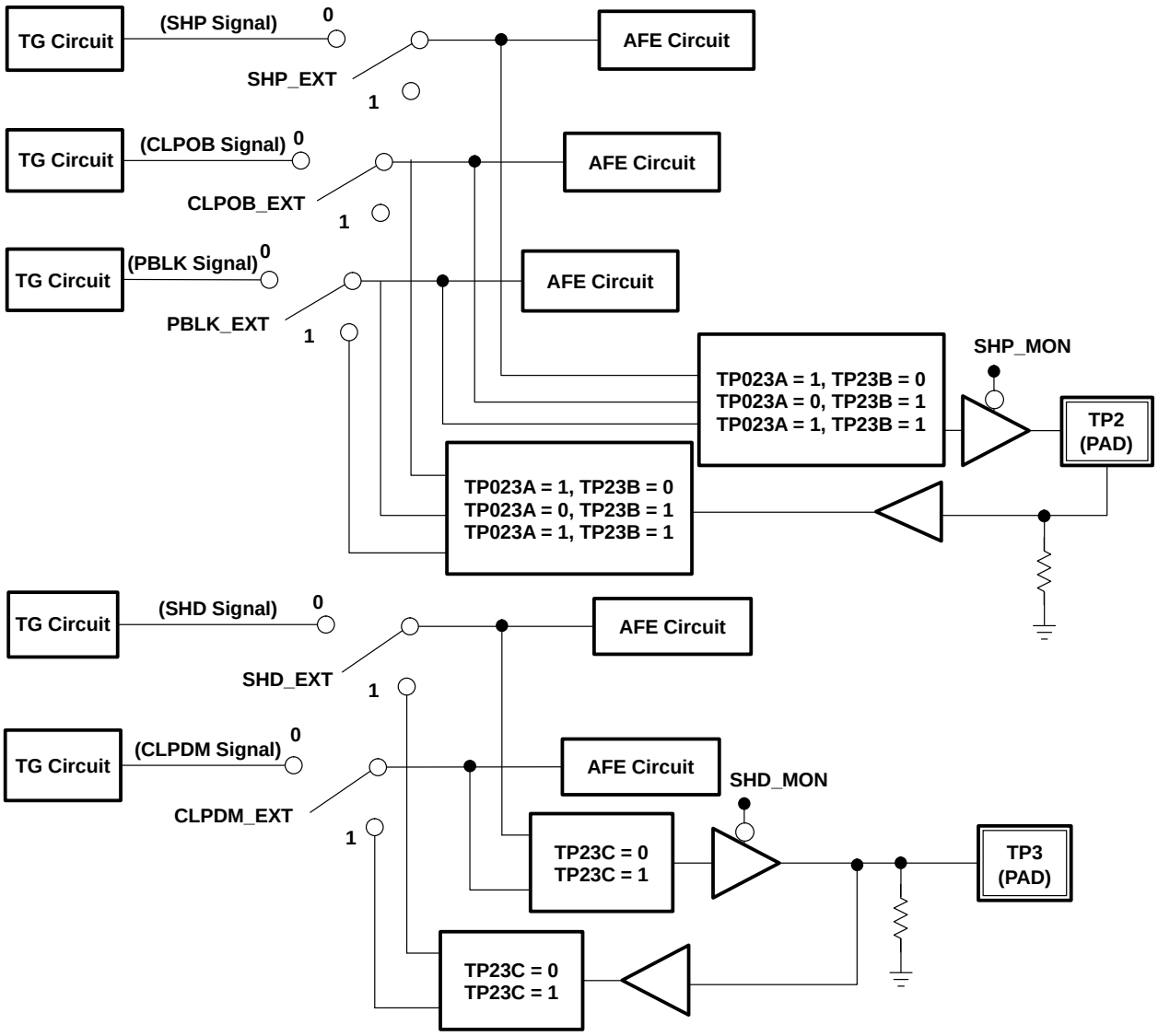

3 Serial Interface Timing Specification

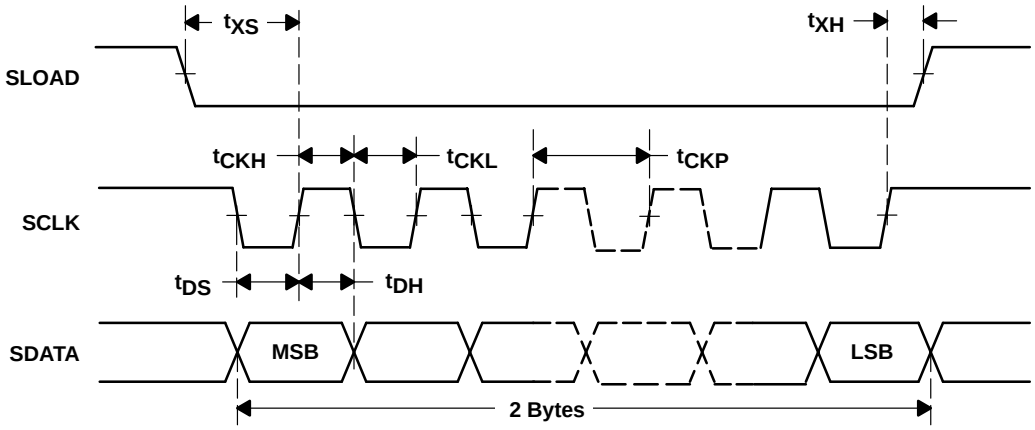

PARAMETER		MIN	TYP	MAX	UNIT
t_{CKP}	Clock period	100			ns
t_{CKH}	Clock high-pulse duration	40			ns
t_{CKL}	Clock low-pulse duration	40			ns
t_{DS}	Data setup time	30			ns
t_{DH}	Data hold time	30			ns
t_{XS}	SLOAD to SCLK setup time	30			ns
t_{XH}	SCLK to SLOAD hold time	30			ns

A data shift operation should occur at the rising edge of SCLK while SLOAD is LOW. At the rising edge of SLOAD, 2 bytes of input data are loaded into the parallel latch in the VSP2267.

When the input serial data is longer than 2 bytes (16 bits), the last 2 bytes become effective and the previous bits are lost.

SD15 MSB	SD14	SD13	SD12	SD11	SD10 LSB	SD9 MSB	SD8	SD7	SD6	SD5	SD4	SD3	SD2	SD1	SD0 LSB
A5	A4	A3	A2	A1	A0	D9	D8	D7	D6	D5	D4	D3	D2	D1	D0
Register address (default)						Register data (default value)									

Serial data for the AFE is supplied to the operation at every ADCCK edge (address 000000 to 000011).

Serial data input for the TG should be made when the CCD operation is changed.

Serial data for the TG is applied to the operation 1 H before every readout. (CCD) starting point (address 000100 to 011000).

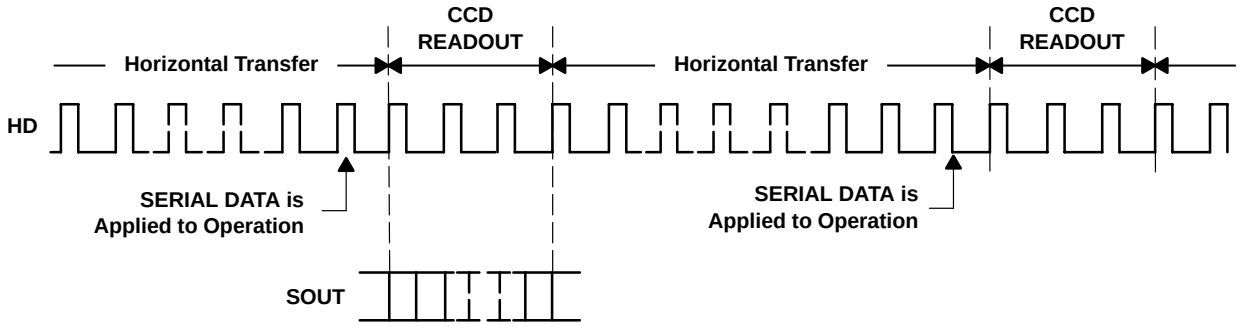

Serial data output, starting from address 000000, occurs during CCD readout.

3.1 Serial Data Format

Register Name	A5	A4	A3	A2	A1	A0	D9 MSB	D8	D7	D6	D5	D4	D3	D2	D1	D0 LSB
Configura-tion	0	0	0	0	0	0	0	O3	O2	O1	O0	P2	P1	P0	J1	J0
PGA gain	0	0	0	0	0	1	G9	G8	G7	G6	G5	G4	G3	G2	G1	G0
Reserved	0	0	0	0	1	0	—	—	—	—	—	—	—	—	—	—
AFE standby	0	0	0	0	1	1	0	0	0	0	0	C0	0	0	0	0
Operation mode	0	0	0	1	0	0	0	CHMOD2	CHMOD1	DRV2	DRV1	CCD MSB	CCD	CCD LSB	PWSV2	PWSV1
Function, ExtTRG strobe duration	0	0	0	1	0	1	SWT4 MSB	SWT3	SWT2	SWT1	SWT0 LSB	STLSUB	EDGSL	STILL	ZOOM	CHDEL
Strobe position	0	0	0	1	1	0	ST9 MSB	ST8	ST7	ST6	ST5	ST4	ST3	ST2	ST1	ST0 LSB
E-shutter	0	0	0	1	1	1	ES9 MSB	ES8	ES7	ES6	ES5	ES4	ES3	ES2	ES1	ES0 LSB
E-shutter VDHD Polarity	0	0	1	0	0	0	0	0	POLHV	0	0	0	1	0	DD1 MSB	DD2 LSB
SUBSW	0	0	1	0	0	1	SUBSW9 MSB	SUBSW8	SUBSW7	SUBSW6	SUBSW5	SUBSW4	SUBSW3	SUBSW2	SUBSW1	SUBSW0 LSB
Strobe/ V-transfer E-zoom/ SUBSW2	0	0	1	0	1	0	SUB2 MSB	SUB2 LSB	0	STROBE	STVV5 MSB	STVV4	STVV3	STVV2	STVV1	STVV0 LSB
E-zoom	0	0	1	0	1	1	EZ9 MSB	EZ8	EZ7	EZ6	EZ5	EZ4	EZ3	EZ2	EZ1	EZ0 LSB
H1	0	0	1	1	0	0	H1 ext	H1 mon	0	0	0	0	H1fa3 MSB	H1fa2	H1fa1	H1fa0 LSB
Reserved	0	0	1	1	0	1	—	—	—	—	—	—	—	—	—	—
H2 I/O	0	0	1	1	1	0	H2 ext	0	0	0	0	0	0	0	0	0
H2	0	0	1	1	1	1	0	0	0	0	0	0	H2ri3 MSB	H2ri2	H2ri1	H2ri0 LSB
R I/O	0	1	0	0	0	0	R ext	R mon	0	0	0	0	0	0	0	0
R	0	1	0	0	0	1	0	0	0	0	0	Rfa4 MSB	Rfa3	Rfa2	Rfa1	Rfa0 LSB
SHP	0	1	0	0	1	0	SHP ext	SHP mon	0	0	0	0	SHPfa3 MSB	SHPfa2	SHPfa1	SHPfa0 LSB
Reserved	0	1	0	0	1	1	—	—	—	—	—	—	—	—	—	—
SHD	0	1	0	1	0	0	SHD ext	SHD mon	0	0	0	0	SHDfa3 MSB	SHDfa2	SHDfa1	SHPfa0 LSB
Reserved	0	1	0	1	0	1	—	—	—	—	—	—	—	—	—	—
ADCCK	0	1	0	1	1	0	ADCCK ext	ADCCK mon	0	0	ADCCKri5 MSB	ADCCKri4	ADCCKri3	ADCCKri2	ADCCKri1	ADCCKri0 LSB
Reserved	0	1	0	1	1	1	—	—	—	—	—	—	—	—	—	—
TEST AFE	0	1	1	0	0	0	TP23 MSB	TP23	TP23 MSB	TP01	CLPDM ext	0	PBLK ext	0	CLPOB ext	0

Do not input values into reserved registers.
A 0 input is required for data bits marked with a dash (—), except in reserved registers.

3.1.1 Configuration Register

SD15	SD14	SD13	SD12	SD11	SD10	SD9	SD8	SD7	SD6	SD5	SD4	SD3	SD2	SD1	SD0
0	0	0	0	0	0	0	O3	O2	O1	O0	P2	P1	P0	J1	J0
default						0	1	0	0	0	0	0	0	0	0

BIT	NAME	DEFAULT VALUE	DESCRIPTION
SD8–SD5	O[3:0]	1000	Programmable OB clamp level 0000 = 2 LSB 0001 = 18 LSB 0010 = 34 LSB 0011 = 50 LSB 0100 = 66 LSB 0101 = 82 LSB 0110 = 98 LSB 0111 = 114 LSB 1000 = 130 LSB (default) 1001 = 146 LSB 1010 = 162 LSB 1011 = 178 LSB 1100 = 194 LSB 1101 = 210 LSB 1110 = 226 LSB 1111 = 242 LSB
SD4	P2	0	SHP/SHD clock polarity 0 = Polarity of SHP/SHD is active low. 1 = Polarity of SHP/SHD is active high.
SD3	P1	0	CLPOB clock polarity 0 = Polarity of CLPOB is active low 1 = Polarity of CLPOB is active high
SD2	P0	0	CLPDM clock polarity 0 = Polarity of CLPDM is active low 1 = Polarity of CLPDM is active high
SD1–SD0	J[1:0]	00	Additional output delay 00 = Additional delay is 0 ns 01 = Additional delay is 5 ns (typical) 10 = Additional delay is 10 ns (typical) 11 = Additional delay is 13 ns (typical)

3.1.2 PGA Gain Register

SD15	SD14	SD13	SD12	SD11	SD10	SD9	SD8	SD7	SD6	SD5	SD4	SD3	SD2	SD1	SD0
0	0	0	0	0	1	G9	G8	G7	G6	G5	G4	F3	G2	G1	G0
default						0	0	1	0	0	0	0	0	0	0

BIT	NAME	DEFAULT VALUE	DESCRIPTION
SD9–SD0	G[9:0]	0010000000	PGA gain characteristics 0000000000 = –6 dB 0000110101 = –3 dB 0010000000 = 0 dB 0010110101 = 3 dB 0011111111 = 6 dB 0101111111 = 12 dB 1000100000 = 20 dB 1101001000 = 34 dB 1111111111 = 42 dB

3.1.3 AFE Standby Register

SD15	SD14	SD13	SD12	SD11	SD10	SD9	SD8	SD7	SD6	SD5	SD4	SD3	SD2	SD1	SD0
0	0	0	0	1	1	0	0	0	0	0	C0	0	0	0	0
default						0	0	0	0	0	0	0	0	0	0

BIT	NAME	DEFAULT VALUE	DESCRIPTION
SD4	C0	0	AFE operation mode (normal/standby) 0 = AFE normal operation mode 1 = AFE standby mode

3.1.4 Operation Mode Register

SD15	SD14	SD13	SD12	SD11	SD10	SD9	SD8	SD7	SD6	SD5	SD4	SD3	SD2	SD1	SD0
0	0	0	1	0	0	0	CHMOD2	CHMOD1	DRV2	DRV1	CCD MSB	CCD	CCD LSB	PWSV2	PWSV1
default						0	0	0	0	1	0	0	1	0	0

BIT	NAME	DEFAULT VALUE	DESCRIPTION
SD8–SD7	CHMOD[2:1]	00	Operation mode: X0 = HD-VD phase (default) 01 = Odd field 11 = Even field
SD6–SD5	DRV [2:1]	01	Operation mode: 00 = Field mode 01 = Frame mode (default) 10 = ×2 mode 11 = ×2 monitor
SD4–SD2	CCD[2:0]	001	CCD model: 001 = 2A CCD (default) 010 = 2B CCD
SD1	PWSV2	0	Output pin state: 0 = normal operation 1 = (H1, R, V3, V4, CH1, CH2, CH3, CH4, SUB , SHP, SHD, CPOB, CLPDM, PBLK = Fixed low) (H2, ADCLK, V1, V2 = Fixed low)
SD0	PWSV1†	0	Output pin state: 0 = normal operation‡ (H2, ADCLK, V1, V2 = Fixed low)‡ 1 = (H1, R, V3, V4, CH1, CH2, CH3, CH4, SUB, SHP, SHD, CPOB, CLPDM, PBLK = Fixed high)

† When PWSV1 = PWSV2=1, automatically set as PWSV1 = 1, PWSV2 = 0.
‡ When PWSV1 = 1, the H1 and H2 pins become high impedance. PWSV1 = 1 during H-blanking makes H1 = high, H2 = low.

3.1.5 Function, ExtTRG, Strobe Duration Register

SD15	SD14	SD13	SD12	SD11	SD10	SD9	SD8	SD7	SD6	SD5	SD4	SD3	SD2	SD1	SD0
0	0	0	1	0	1	SWT4 MSB	SWT3	SWT2	SWT1	SWT0 LSB	STLSUB	EDGSL	STILL	ZOOM	CHDEL
default						0	0	0	0	0	1	0	0	0	0

BIT	NAME	DEFAULT VALUE	DESCRIPTION
SD9–SD5	SWT[4:0]	00000	Strobe output width definition: Strobe (STO pin) signal duration instruction. Effective only when the strobe function is ON (address 001010 bit 6 = high) The strobe pulse duration is defined by 1H step. Use binary code from $0 \le n2 \le 31$ When n2 = 0, the STO output remains low.
SD4	STLSUB	1	SUB pulse stop point: 0 = Define SUB (SUB pin) pulse stop point by external trigger. 1 = Define SUB (SUB pin) pulse stop point by serial data.
SD3	EDGSL	0	Trigger select for the still function: 0 = Use VD (VD pin) rising edge as count start for SUBSW high. 1 = Use external trigger (TRG pin) rising edge as count start for SUBSW high.
SD2	STILL†	0	Function: 0 = normal operation 1 = Still function (see *Still Function*, Section 2.17)
SD1	ZOOM†	0	Function: 0 = normal operation 1 = Electronic zoom function (see *E-Zoom Register*, Section 3.1.11)
SD0	CHDEL	0	Output pin: 0 = normal operation 1 = (CH1, CH2, CH3, CH4 pins = Fixed high) for longer integration

† Electronic zoom and still modes are alternatives.

3.1.6 Strobe Position Register

SD15	SD14	SD13	SD12	SD11	SD10	SD9	SD8	SD7	SD6	SD5	SD4	SD3	SD2	SD1	SD0
0	0	0	1	1	0	ST9 MSB	ST8	ST7	ST6	ST5	ST4	ST3	ST2	ST1	ST0 LSB
default						0	0	0	0	0	0	0	0	0	0

BIT	NAME	DEFAULT VALUE	DESCRIPTION
SD9–SD0	ST[9:0]	0000000000	Strobe (STO pin) signal start position instruction. Effective only when the strobe function is ON (address 001010 bit 6 = high) Strobe pulse start position is defined by 1H step. Use binary code from $0 \le n1 \le A–2$. Note that A is an HD number between two successive VD pulses. Count n1 = 0 at 2 H after readout pulse (CH1 to CH4).

3.1.7 E-Shutter Register

SD15	SD14	SD13	SD12	SD11	SD10	SD9	SD8	SD7	SD6	SD5	SD4	SD3	SD2	SD1	SD0
0	0	0	1	1	1	ES9 MSB	ES8	ES7	ES6	ES5	ES4	ES3	ES2	ES1	ES0 LSB
default						0	1	1	1	0	1	1	0	0	1

BIT	NAME	DEFAULT VALUE	DESCRIPTION
SD9–SD0	ES[9:0]	0111011001	SUB (SUB pin) pulse number instruction SUB pulse number is definied using binary code from $0 \le n \le A–3$. Note that A is an HD number between two successive VD pulses. When n = 0, SUB pulse is zero. SUB pulse starts 2H after readout (CH1 to CH4). Integration time is defined by (A – n – 1) H. Initial: 16.6 ms integration at 36-MHz (MCLK) frame mode

3.1.8 E-Shutter, VDHD Polarity Register

SD15	SD14	SD13	SD12	SD11	SD10	SD9	SD8	SD7	SD6	SD5	SD4	SD3	SD2	SD1	SD0
0	0	1	0	0	0	0	0	POLHV	0	0	0	1	0	DD1 MSB	DD2 LSB
default						0	0	0	0	0	0	1	0	0	0

BIT	NAME	DEFAULT VALUE	DESCRIPTION
SD7	POLHV	0	VD, HD polarity selection: 0 = positive 1 = negative
SD5		0	(Input required) 0
SD4		0	(Input required) 0
SD3		1	(Input required) 1
SD1–SD0	DD[1:0]	00	Electronic shutter SUB pulse position: 00 = Position A (during horizontal blanking) 01 = Position B (during horizontal transfer) 10 = Position C (during horizontal transfer) 11 = Position D (during horizontal transfer)

3.1.9 SUBSW Register

SD15	SD14	SD13	SD12	SD11	SD10	SD9	SD8	SD7	SD6	SD5	SD4	SD3	SD2	SD1	SD0
0	0	1	0	0	1	SUBSW9 MSB	SUBSW8	SUBSW7	SUBSW6	SUBSW5	SUBSW4	SUBSW3	SUBSW2	SUBSW1	SUBSW0 LSB
default						0	0	0	0	0	0	0	0	0	0

BIT	NAME	DEFAULT VALUE	DESCRIPTION
SD9–SD0	SUBSW[9:0]	0000000000	SUBSW signal output position when in the still function. SUBSW signal output position is defined by 1H step using a binary code from $0 \le n0 \le A–2$. Note that A is an HD number between two successive VD pulses. When n0 = 0, SUBSW must be kept 0. Count as 1 the first HD after VD or a trigger pulse.

3.1.10 Strobe/V-Transfer E-Zoom/SUBSW2 Register

SD15	SD14	SD13	SD12	SD11	SD10	SD9	SD8	SD7	SD6	SD5	SD4	SD3	SD2	SD1	SD0
0	0	1	0	1	0	SUB2 MSB	SUB2 LSB	0	STROBE	STVV5 MSB	STVV4	STVV3	STVV2	STVV1	STVV0 LSB
default						0	0	0	0	0	0	0	0	0	0

BIT	NAME	DEFAULT VALUE	DESCRIPTION
SD9–SD8	SUB2[1:0]	00	SUBSW2 function: 0X = SUBSW2 low during ×2, ×2 monitor modes 10 = SUBSW2 low 11 = SUBSW2 high
SD6	STROBE	0	Strobe function flag: 0 = Strobe off 1 = Strobe function (Position defined by ST[9:0]. Duration defined by STW[4:0])
SD5–SD0	STVV[5:0]	000000	Vertical high speed transfer position control when in the still function. Position is controlled by 1H step counting binary code from $0 \le n3 \le 63$. When n0 = 0, Vertical high speed transfer synchronizes to the SUBSW rising edge.

3.1.11 E-Zoom Register

SD15	SD14	SD13	SD12	SD11	SD10	SD9	SD8	SD7	SD6	SD5	SD4	SD3	SD2	SD1	SD0
0	0	1	0	1	1	EZ9 MSB	EZ8	EZ7	EZ6	EZ5	EZ4	EZ3	EZ2	EZ1	EZ0 LSB
default						0	0	0	0	0	0	0	0	0	0

BIT	NAME	DEFAULT VALUE	DESCRIPTION
SD9–SD0	EZ[1:0]	0000000000	Electronic zoom vertical transfer line definition, when in the electronic zoom function. Vertical transfer line number, after readout, is defined using a binary code from 0 to H-Max (H-Max varies depending on the CCD model). When EZ = 0, no vertical transfer is made after readout.

3.1.12 H1 Register

SD15	SD14	SD13	SD12	SD11	SD10	SD9	SD8	SD7	SD6	SD5	SD4	SD3	SD2	SD1	SD0
0	0	1	1	0	0	H1 ext	H1 mon	0	0	0	0	H1fa3 MSB	H1fa2	H1fa1	H1fa0 LSB
default						0	1	0	0	0	0	0	1	1	1

BIT	NAME	DEFAULT VALUE	DESCRIPTION
SD9	H1 ext	0	External selection: 0 = Without use of external H1 clock 1 = Use external H1 clock
SD8	H1 mon	1	Monitor selection: 0 = H1 clock monitor 1 = H1 clock without monitor
SD3–SD0	H1fa[3:0]	0111	H1 delay definition using 4 bits: 1111 = H1 delay, maximum : 0111 = H1 delay, typical : 0000 = H1 delay, minimum

3.1.13 H2 I/O Register

SD15	SD14	SD13	SD12	SD11	SD10	SD9	SD8	SD7	SD6	SD5	SD4	SD3	SD2	SD1	SD0
0	0	1	1	1	0	H2 ext	0	0	0	0	0	0	0	0	0
default						0	0	0	0	0	0	0	0	0	0

BIT	NAME	DEFAULT VALUE	DESCRIPTION
SD9	H2 ext	0	External selection: 0 = Without use of external H2 clock 1 = Use external H2 clock

3.1.14 H2 Register

SD15	SD14	SD13	SD12	SD11	SD10	SD9	SD8	SD7	SD6	SD5	SD4	SD3	SD2	SD1	SD0
0	0	1	1	1	1	0	0	0	0	0	0	H2ri3 MSB	H2ri2	H2ri1	H2ri0 LSB
default						0	0	0	0	0	0	0	1	1	1

BIT	NAME	DEFAULT VALUE	DESCRIPTION
SD3–SD0	H2ri[3:0]	0111	H2 delay edge definition using 4 bits 1111 = H2 delay, maximum : 0111 = H2 delay, typical : 0000 = H2 delay, minimum

3.1.15 R I/O Register

SD15	SD14	SD13	SD12	SD11	SD10	SD9	SD8	SD7	SD6	SD5	SD4	SD3	SD2	SD1	SD0
0	1	0	0	0	0	R ext	R mon	0	0	0	0	0	0	0	0
default						0	1	0	0	0	0	0	0	0	0

BIT	NAME	DEFAULT VALUE	DESCRIPTION
SD9	R ext	0	External selection: 0 = Without use of external R clock 1 = Use external R clock
SD8	R mon	1	Monitor selection: 0 = R clock without monitor 1 = R clock monitor

3.1.16 R Register

SD15	SD14	SD13	SD12	SD11	SD10	SD9	SD8	SD7	SD6	SD5	SD4	SD3	SD2	SD1	SD0
0	1	0	0	0	1	0	0	0	0	0	Rfa4 MSB	Rfa3	Rfa2	Rfa1	Rfa0 LSB
default						0	0	0	0	0	0	0	0	0	0

BIT	NAME	DEFAULT VALUE	DESCRIPTION
SD4–SD0	Rfa[4:0]	00000	R falling edge definition using 5 bits R duration MAX = 111XX 110XX 101XX 100XX R duration TYP = 0XX00 0XX01 0XX10 R duration MIN = 0XX11

3.1.17 SHP Register

SD15	SD14	SD13	SD12	SD11	SD10	SD9	SD8	SD7	SD6	SD5	SD4	SD3	SD2	SD1	SD0
0	1	0	0	1	0	SHP ext	SHP mon	0	0	0	0	SHPfa3 MSB	SHPfa2	SHPfa1	SHPfa0 LSB
default						0	1	0	0	0	0	1	0	0	0

BIT	NAME	DEFAULT VALUE	DESCRIPTION
SD9	SHP ext	0	External selection: 0 = Without use of external SHP clock 1 = Use external SHP clock
SD8	SHP mon	1	Monitor selection: 0 = SHP clock monitor 1 = SHP clock without monitor
SD3–SD0	SHPfa[3:0]	1000	SHP delay edge definition using 4 bits 1111 = SHP delay maximum : 1000 = SHP delay typical : 0000 = SHP delay minimum

3.1.18 SHD Register

SD15	SD14	SD13	SD12	SD11	SD10	SD9	SD8	SD7	SD6	SD5	SD4	SD3	SD2	SD1	SD0
0	1	0	1	0	0	SHD ext	SHD mon	0	0	0	0	SHDfa3 MSB	SHDfa2	SHDfa1	SHDfa0 LSB
default						0	1	0	0	0	0	1	0	0	0

BIT	NAME	DEFAULT VALUE	DESCRIPTION
SD9	SHD ext	0	External selection: 0 = Without use of external SHD clock 1 = Use external SHD clock
SD8	SHD mon	1	Monitor selection: 0 = SHD clock monitor 1 = SHD clock without monitor
SD3–SD0	SHDfa[3:0]	1000	SHD delay edge definition using 4 bits 1111 = SHD delay maximum : 1000 = SHD delay typical : 0000 = SHD delay minimum

3.1.19 ADCCK Register

SD15	SD14	SD13	SD12	SD11	SD10	SD9	SD8	SD7	SD6	SD5	SD4	SD3	SD2	SD1	SD0
0	1	0	1	1	0	ADCCK ext	ADCCK mon	0	0	ADCCK90 MSB	ADCCK90 LSB	ADCCKri3 MSB	ADCCKri2	ADCCKri1	ADCCKri0 LSB
default						0	1	0	0	0	1	0	1	0	0

BIT	NAME	DEFAULT VALUE	DESCRIPTION
SD9	ADCCK ext	0	External selection: 0 = Without use of external ADCCK-clock 1 = Use external ADCCK-clock
SD8	ADCCK mon	1	Monitor selection: 0 = ADCCK-clock monitor 1 = ADCCK-clock without monitor
SD5–SD4	ADCCK90[1:0]	01	ADCLK 90° adjustment: 00 = ADCCK phase is lagging 0° with respect to CLKO 01 = ADCCK phase is lagging 90° with respect to CLKO 10 = ADCCK phase is lagging 180° with respect to CLKO 11 = ADCCK phase is lagging 270° with respect to CLKO
SD3–SD0	ADCCKri[3:0]	0100	ADCLK delay edge definition using 4 bits

3.1.20 Test AFE I/O Register

SD15	SD14	SD13	SD12	SD11	SD10	SD9	SD8	SD7	SD6	SD5	SD4	SD3	SD2	SD1	SD0
0	1	1	0	0	0	TP23 MSB	TP23	TP23 LSB	TP01	CLPDM ext	0	PBLK ext	0	CLPOB ext	0
default						0	0	0	0	0	0	0	0	0	0

BIT	NAME	DEFAULT VALUE	DESCRIPTION
SD9–SD7	TP23[2:0]	000	TP23 input source selection: 000 = open 001 = SHP and SHD 110 = CLPOB and CLPDM 111 = PBLK and CLPDM
SD6	TP01	0	TP01 source selection: 0 = H1 and R 1 = H1 and H2
SD5	CLPDM ext	0	CLPDM input source selection: 0 = Use internally generated CLPDM clock, with or without monitor 1 = Use external CLPDM clock
SD3	PBLK ext	0	PBLK input source selection: 0 = Use internally generated PBLK clock, with or without monitor 1 = Use external PBLK clock
SD1	CLPOB ext	0	CLPOB input source selection: 0 = Use internally generated CLPOB clock, with or without monitor 1 = Use external CLPOB clock

4 Timing Specification

4.1 HD-MCLK Relation

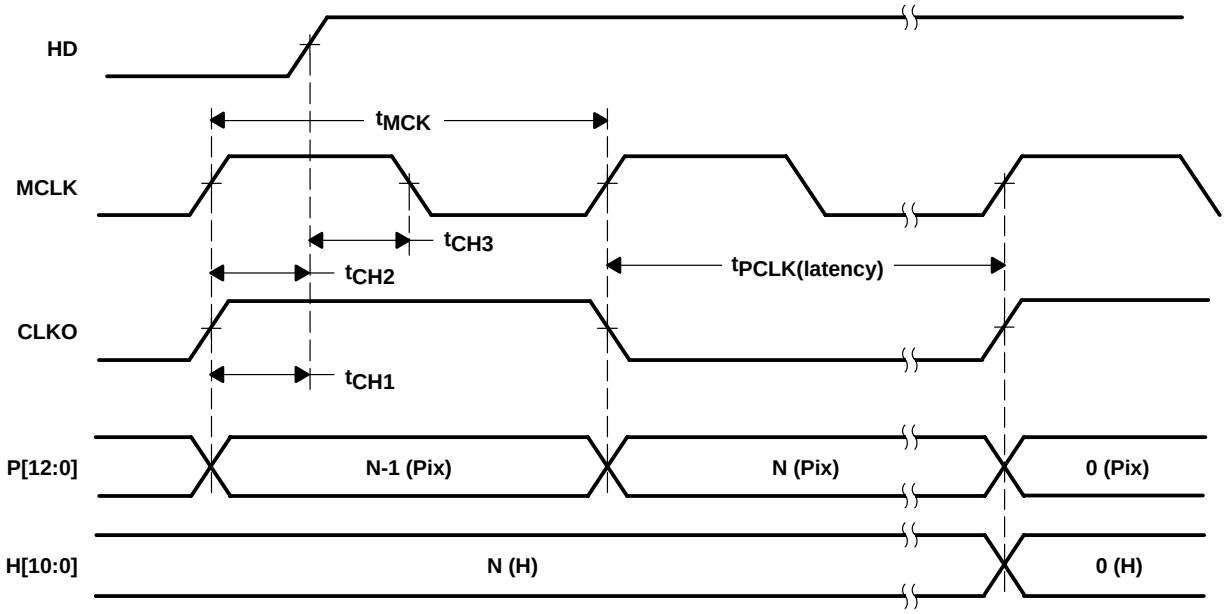

PARAMETER		MIN	TYP	MAX	UNIT
t_{CH1}	CLKO rising edge to HD rising edge	–9		9	ns
t_{CH2}	MCLK rising edge to HD rising edge	4		12	ns
t_{CH3}	HD rising edge to MCLK falling edge	0			ns
t_{MCK}	Master clock period	20		41.7	ns
$t_{PCLK(latency)}$	Clock start latency		10		T†

† Unit T is the master clock cycle duration.

4.2 VD-HD Relation

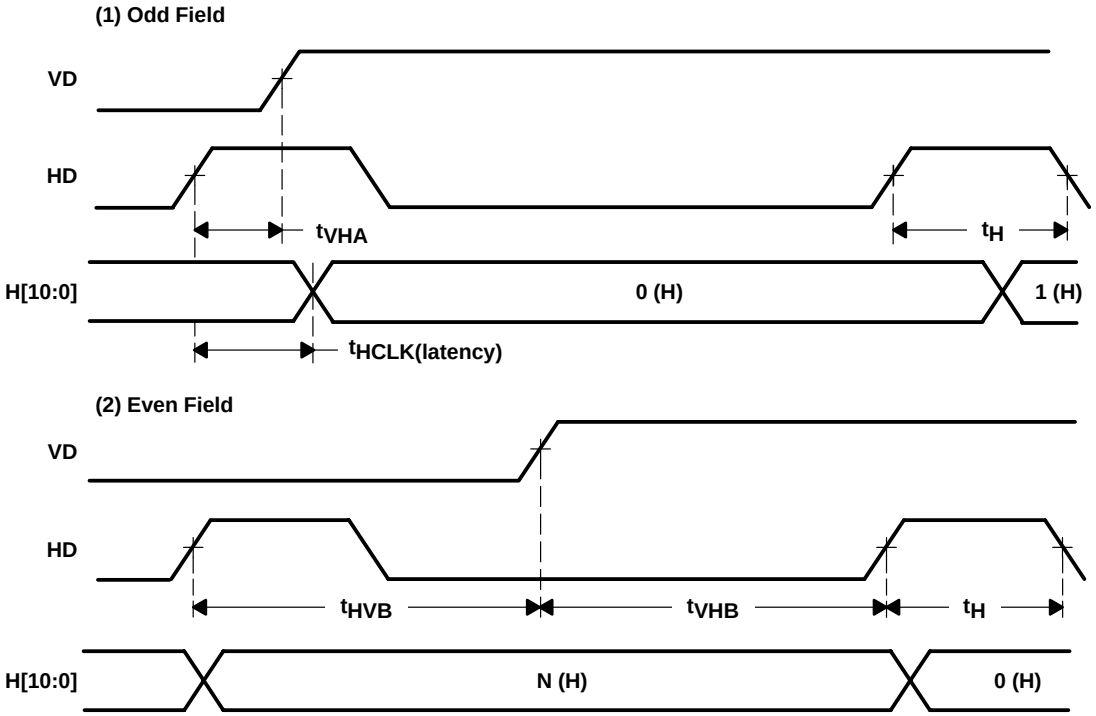

PARAMETER		MIN	TYP	MAX	UNIT
t_{VHA}	HD rising edge to VD rising edge (odd field)	> 0		<200	ns
t_{HVB}	HD rising edge to VD rising edge (even field)	> 30			µs
t_{VHB}	VD rising edge to HD rising edge (even field)	> 30			µs
t_H	HD duration	1		10	µs
$t_{HCLK(latency)}$	H clock start latency	10		11	T†

† Unit T is the master clock cycle duration.

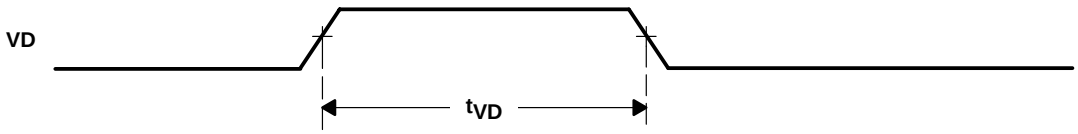

PARAMETER		MIN	TYP	MAX	UNIT
t_{VD}	VD duration	> 1 HD			HD–HD

4.3 High-Speed Timing Specifications

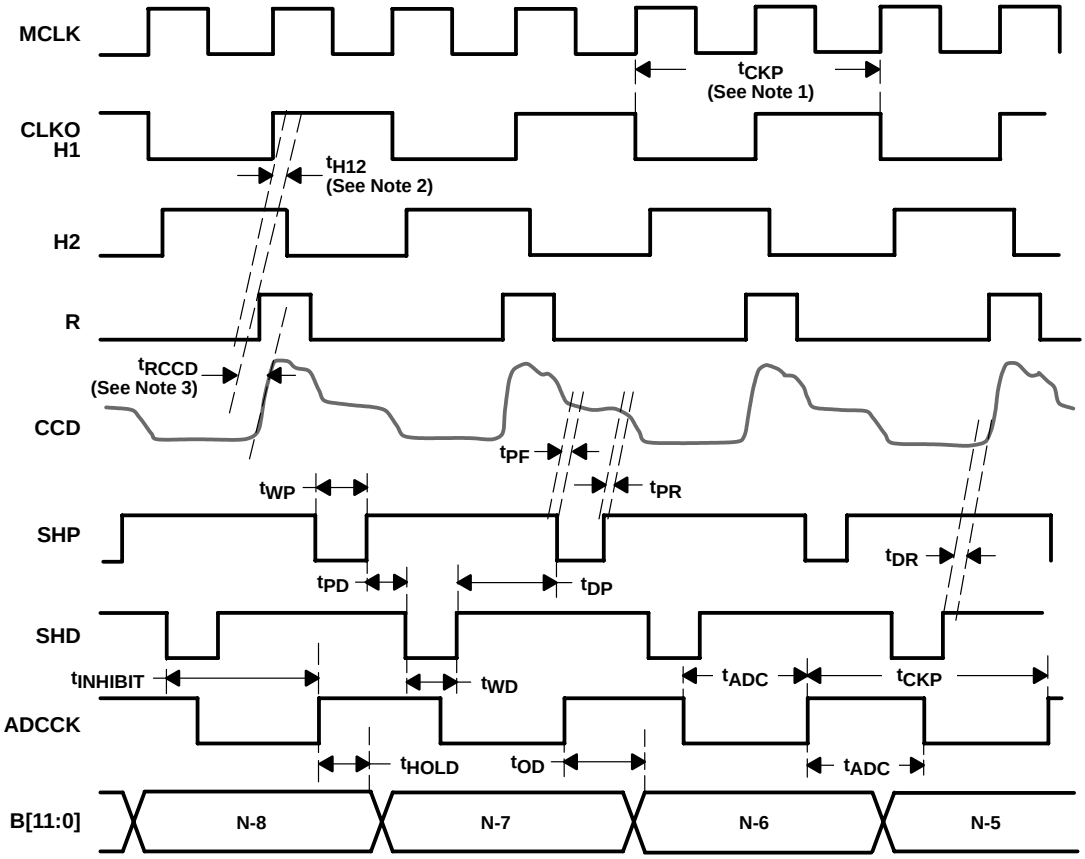

PARAMETER		MIN	TYP	MAX	UNIT
t_{CKP}(1)	Clock period	40		83.3	ns
t_{H12}(2)	Horizontal transfer pulse delay		3		ns
t_{RCCD}(3)	Reset-to-CCD reset delay (varies with CCD model and wiring)		3		ns
t_{PF}	CCD CDS rising edge to SHP falling edge delay			5	ns
t_{PR}	SHP rising edge to CCD CDS falling edge delay		5		ns
t_{DR}	SHD rising edge to CCD signal out rising edge delay		5		ns
t_{WP}	SHP pulse duration	14			ns
t_{WD}	SHD pulse duration	11			ns
t_{PD}	SHP trailing edge to SHD leading edge	8			ns
t_{DP}	SHD trailing edge to SHP leading edge	12			ns
$t_{INHIBIT}$	Inhibited clock period		20		ns
t_{ADC}	ADCCK high/low pulse duration	20		41.7	ns
t_{HOLD}	Output hold time	2			ns
t_{OD}	Output delay (no load)			27	ns
DL	Data latency, normal operation mode		9 (fixed)		ADCCK cycles

NOTES: 1. Clock period varies by CCD model.
2. Horizontal transfer pulse delay varies by CCD model.
3. Reset-to-CDS delay depends on CCD signal response delay. Default setting is 3 ns.

4.4 Horizontal Timing Chart (for 2A CCD)

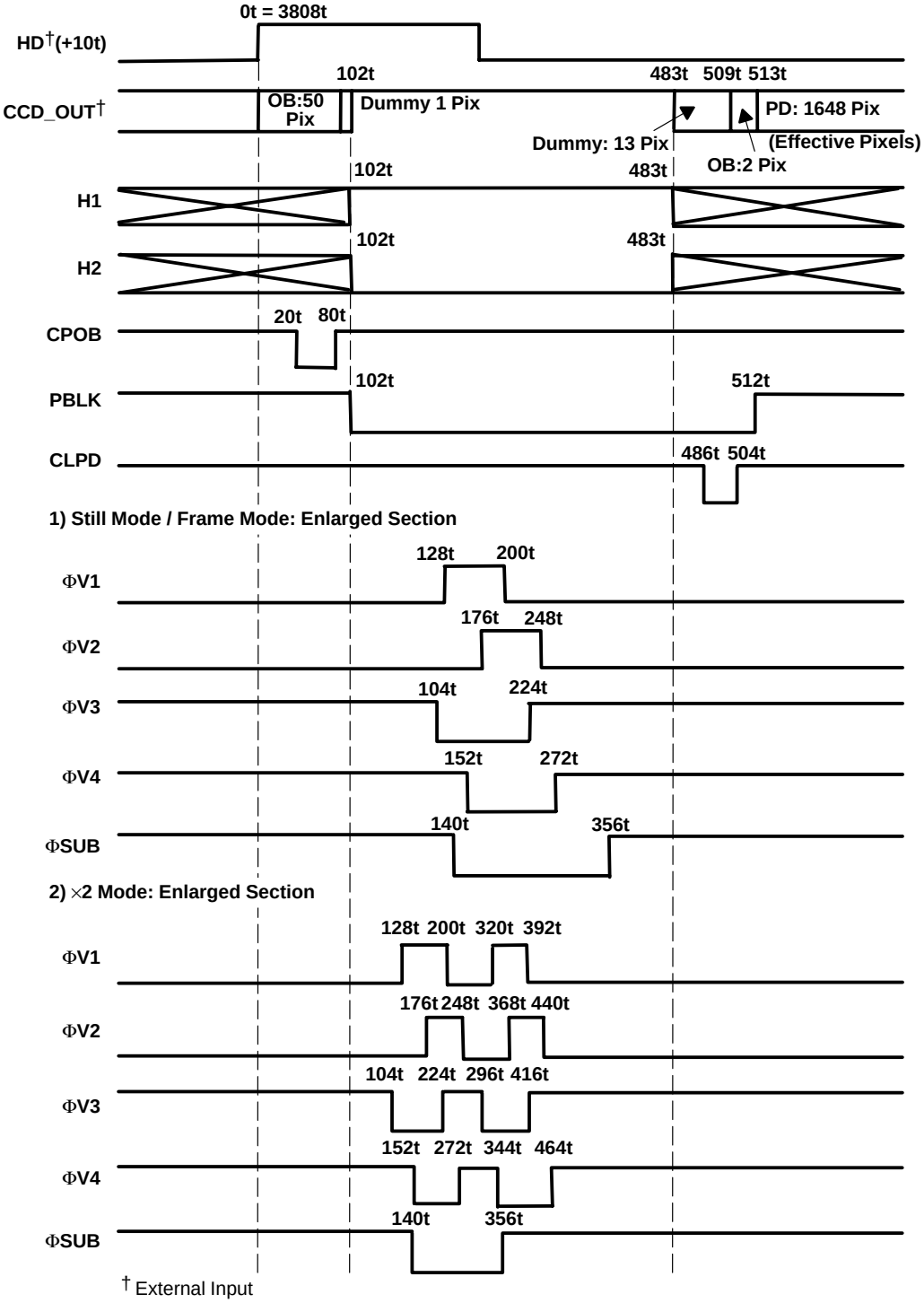

4.5 Vertical Timing Chart (for 2A CCD)

1) V-Rate Readout Detailed Timing Chart: (Field Mode, Odd Field)

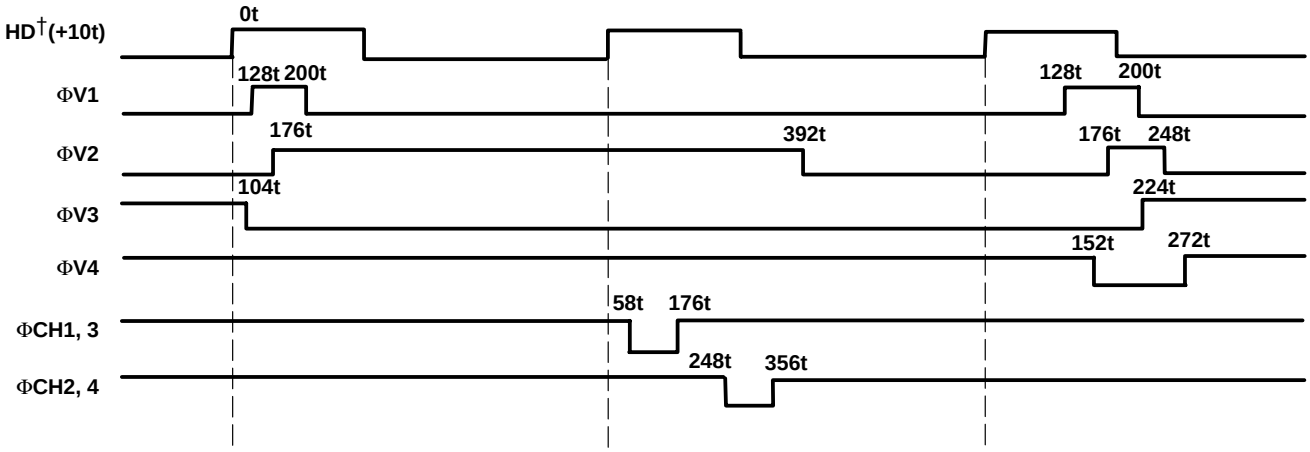

2) V-Rate Readout Detailed Timing Chart: (Field Mode, Even Field)

† External Input

4.5 Vertical Timing Chart (for 2A CCD) (continued)

1) V-Rate Readout Detailed Timing Chart: (Frame Mode, Odd Field)

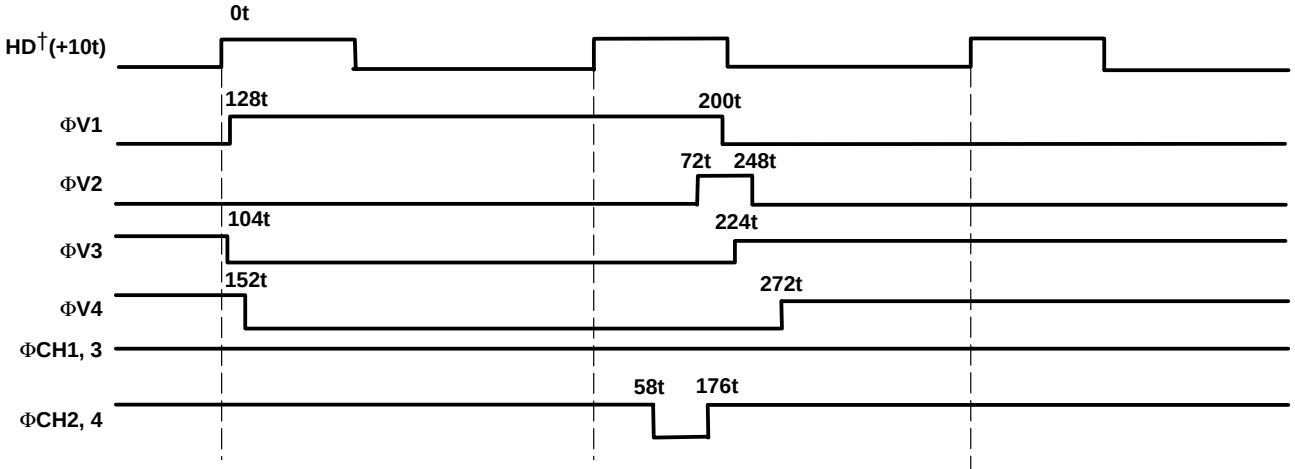

2) V-Rate Readout Detailed Timing Chart: (Frame Mode, Even Field)

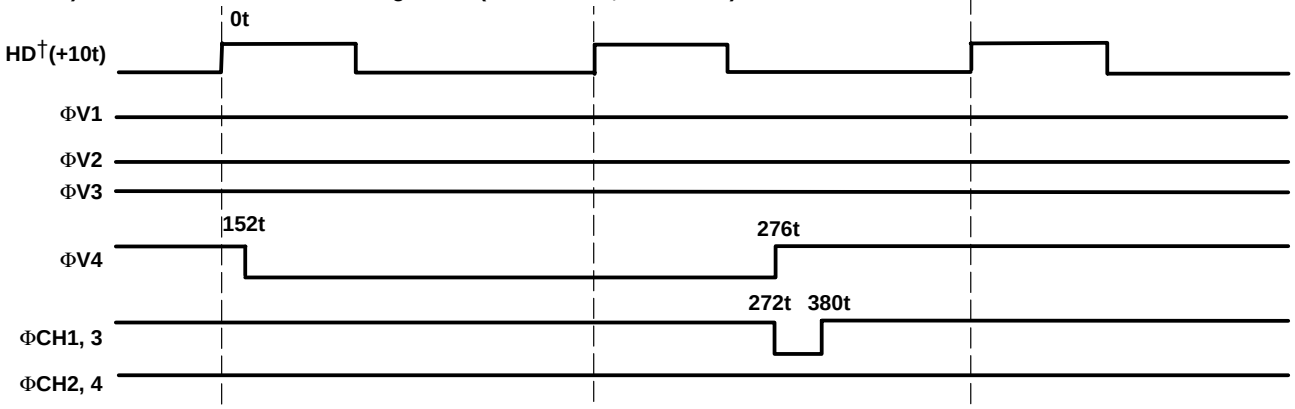

† External Input

4.5 Vertical Timing Chart (for 2A CCD) (continued)

1) V-Rate Readout Detailed Timing Chart: (×2 Mode, Odd Field)

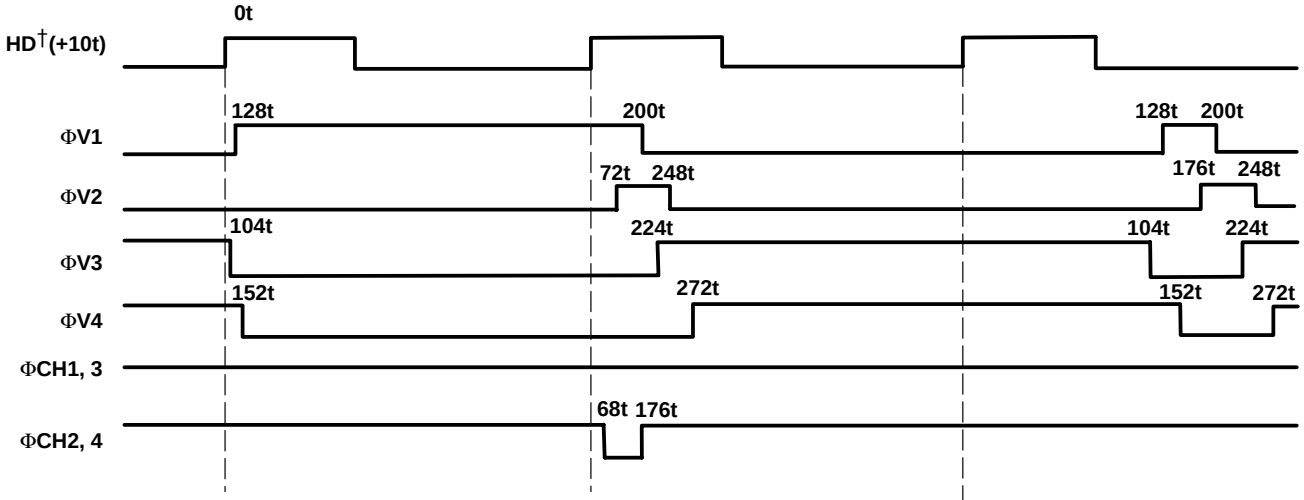

2) V-Rate Readout Detailed Timing Chart: (×2 Mode, Even Field)

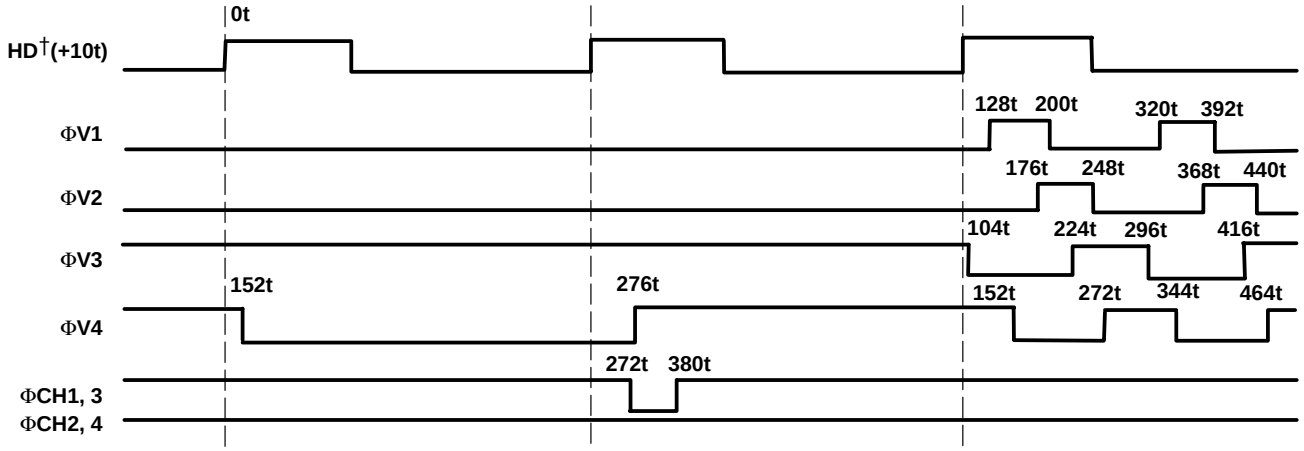

† External Input

4.5 Vertical Timing Chart (for 2A CCD) (continued)

1) V-Rate Readout Detailed Timing Chart: (×2 Monitor Mode)

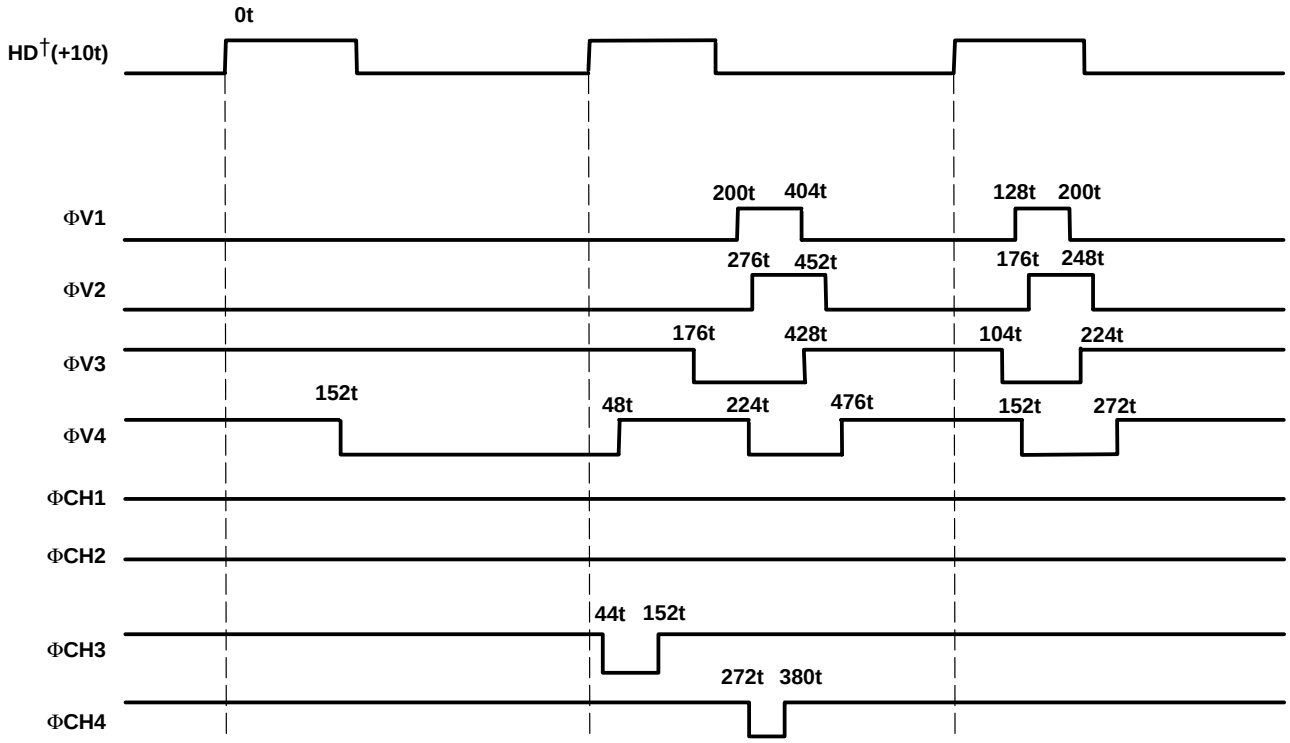

† External Input

4.6 Vertical High-Speed Transfer Timing Chart (for 2A CCD)

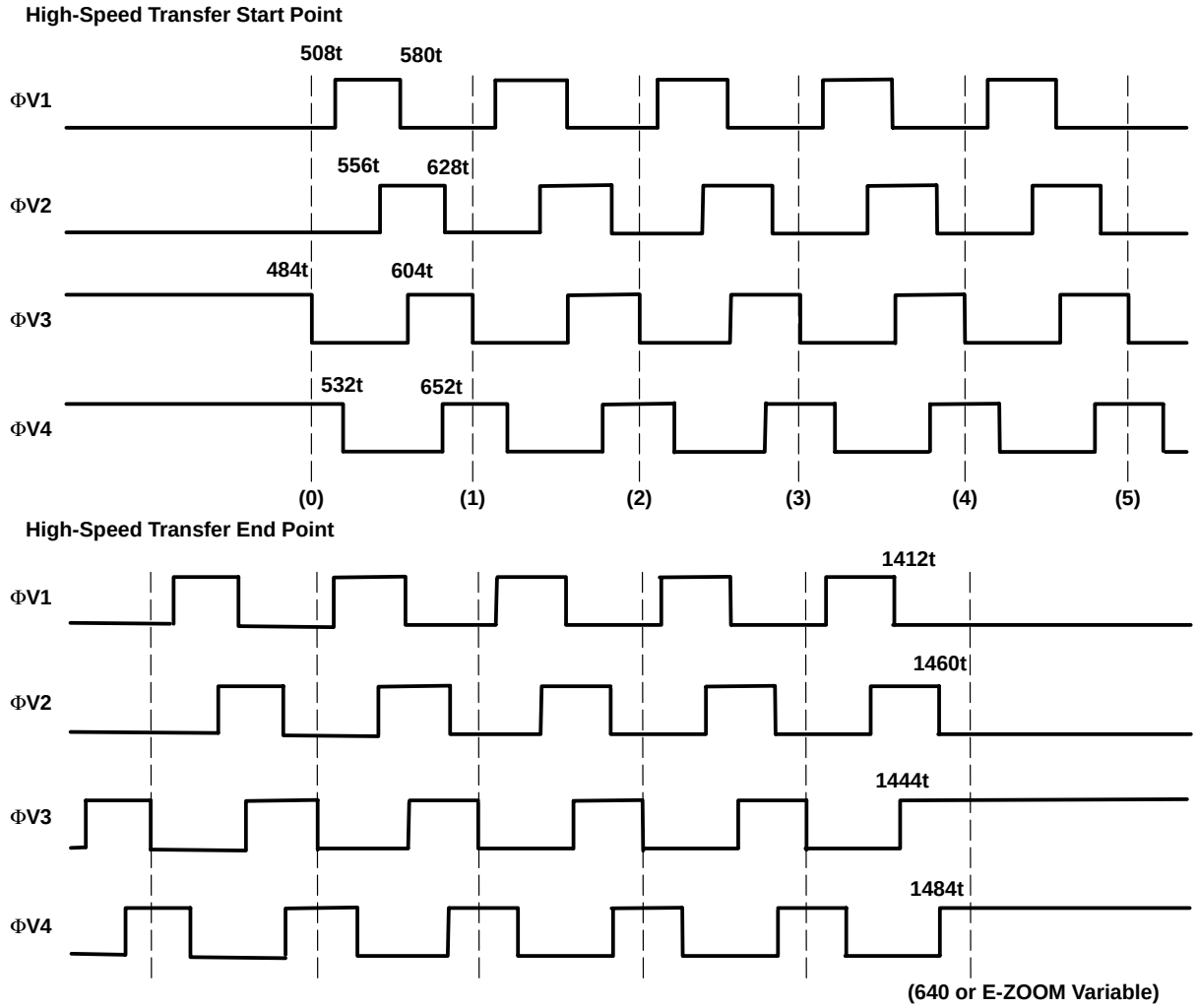

4.7 Vertical Rate Timing (for 2A CCD) [field mode—odd field]

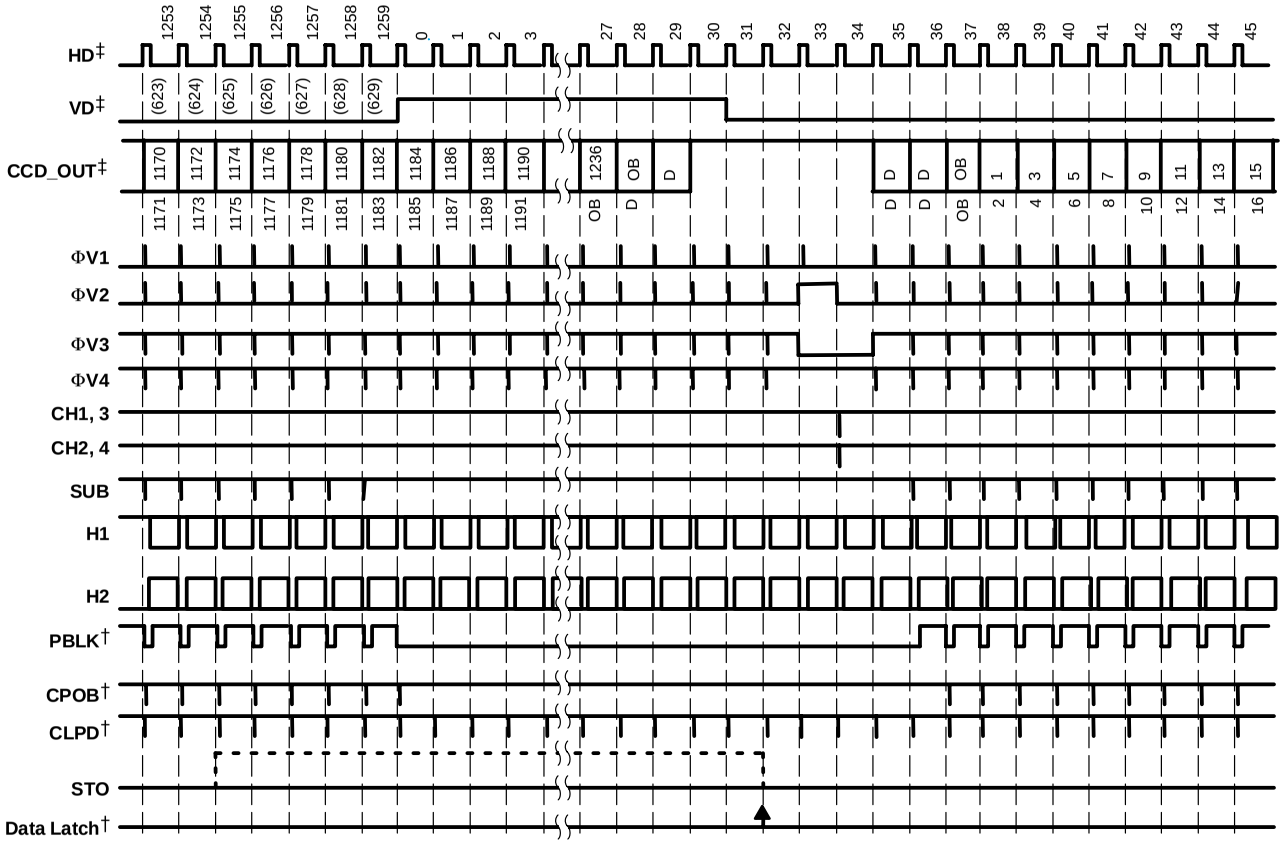

† Internal Use
‡ External Input

4.8 Vertical Rate Timing (for 2A CCD) [field mode—even field]

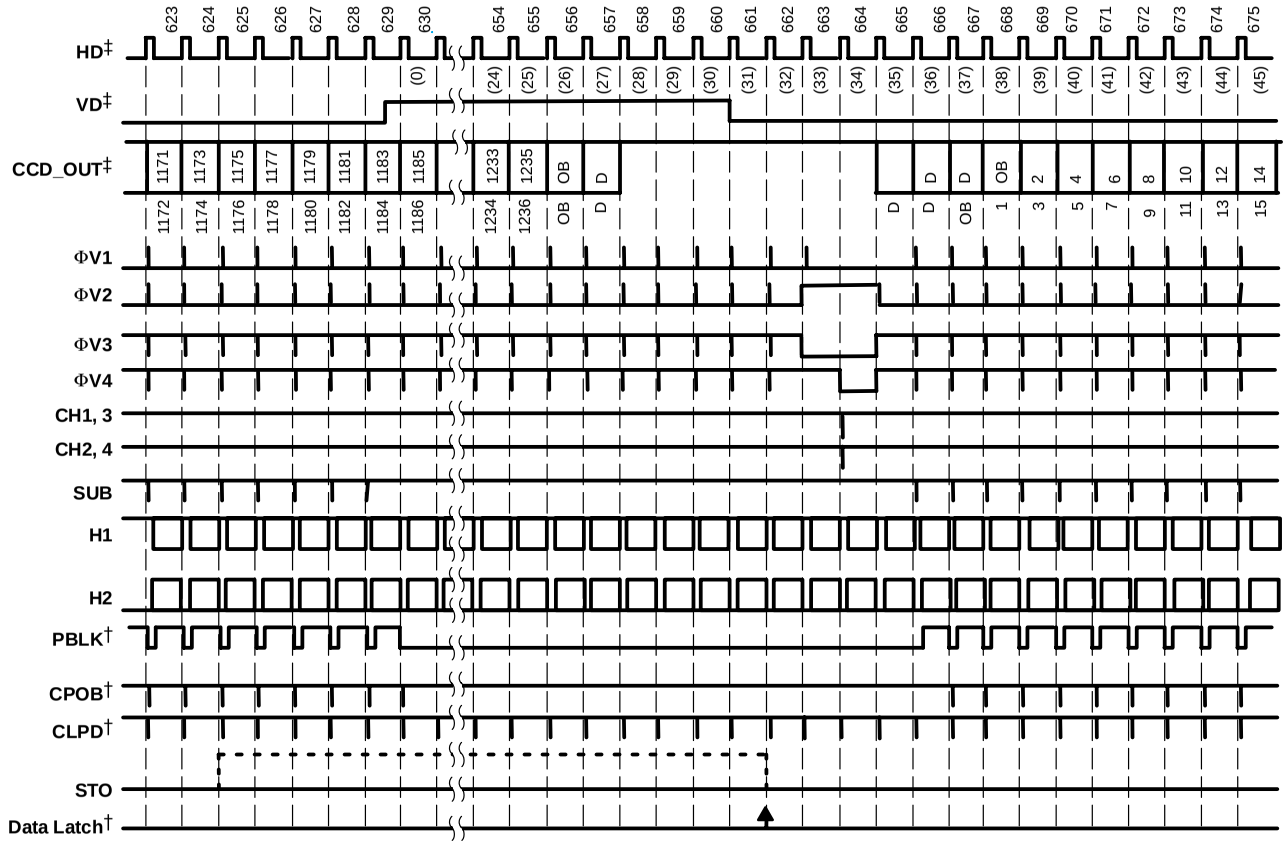

† Internal Use
‡ External Input

4.9 Vertical Rate Timing (for 2A CCD) [frame mode—odd field]

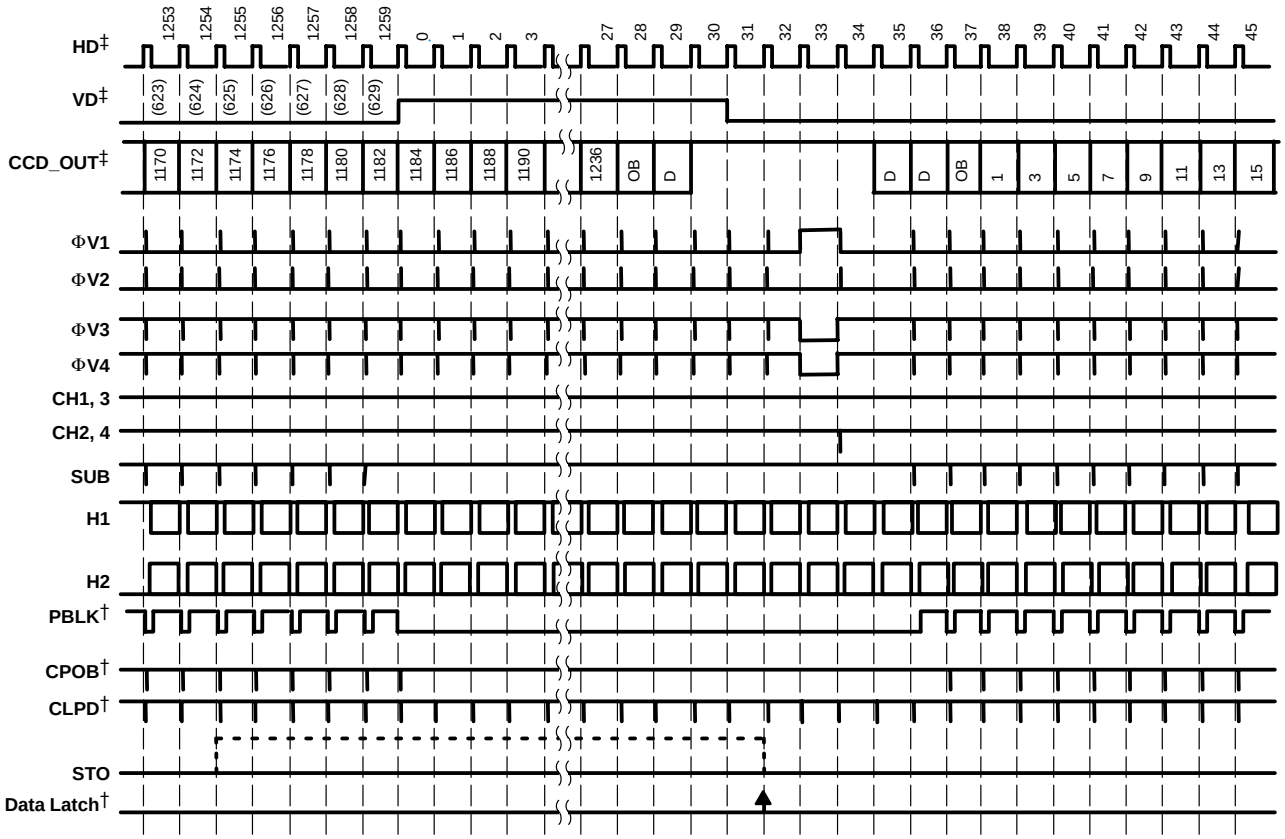

† Internal Use
‡ External Input

4.10 Vertical Rate Timing (for 2A CCD) [frame mode—even field]

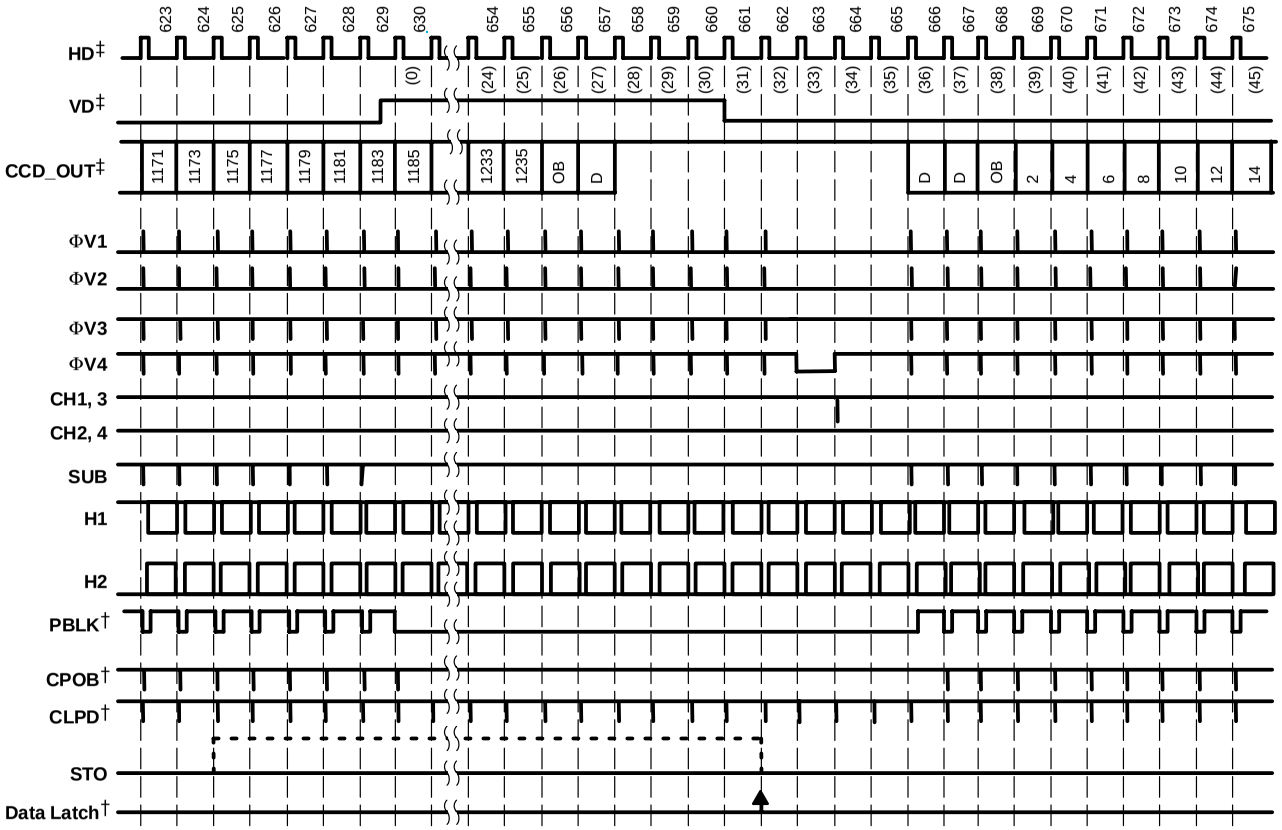

† Internal Use
‡ External Input

4.11 Vertical Rate Timing (for 2A CCD) [×2 mode—odd field]

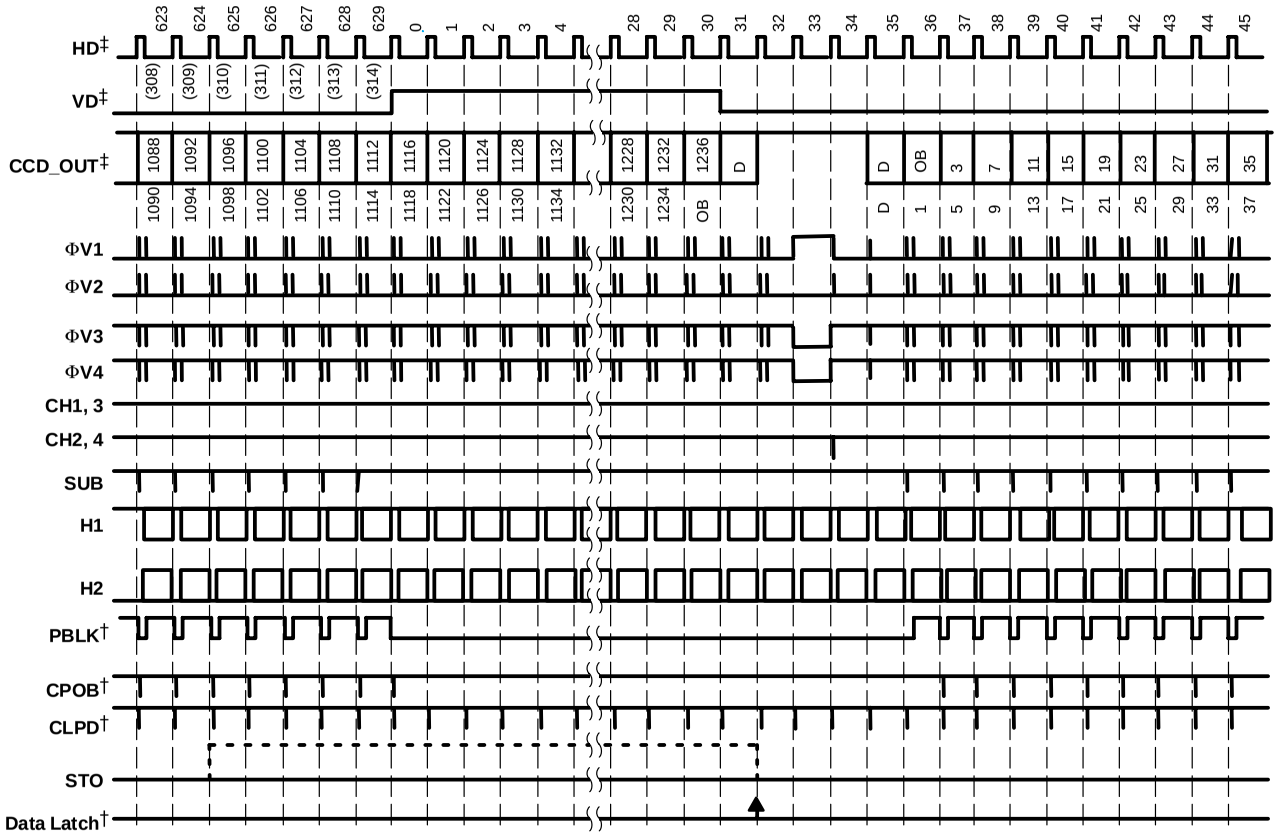

† Internal Use
‡ External Input

4.12 Vertical Rate Timing (for 2A CCD) [×2 mode—even field]

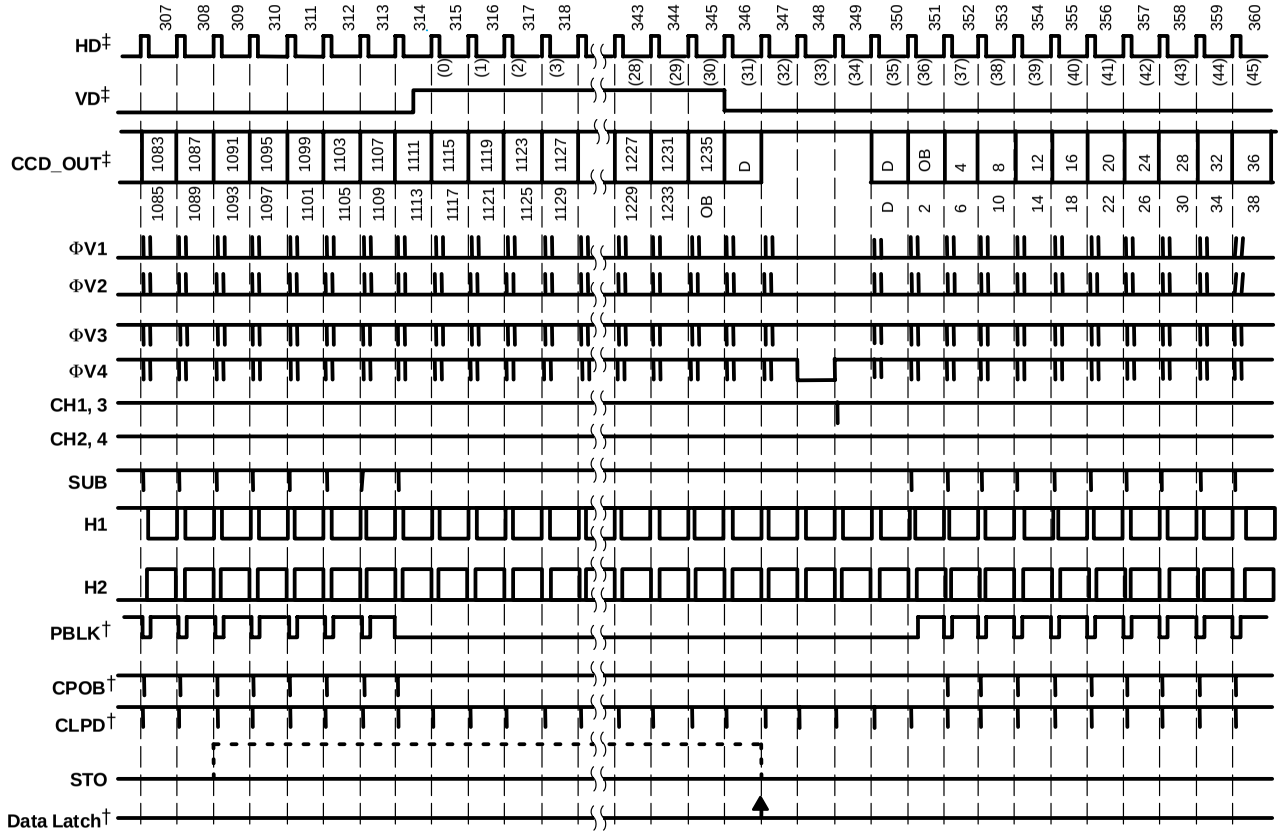

† Internal Use
‡ External Input

4.13 Vertical Rate Timing (for 2A CCD) [×2 monitor mode]

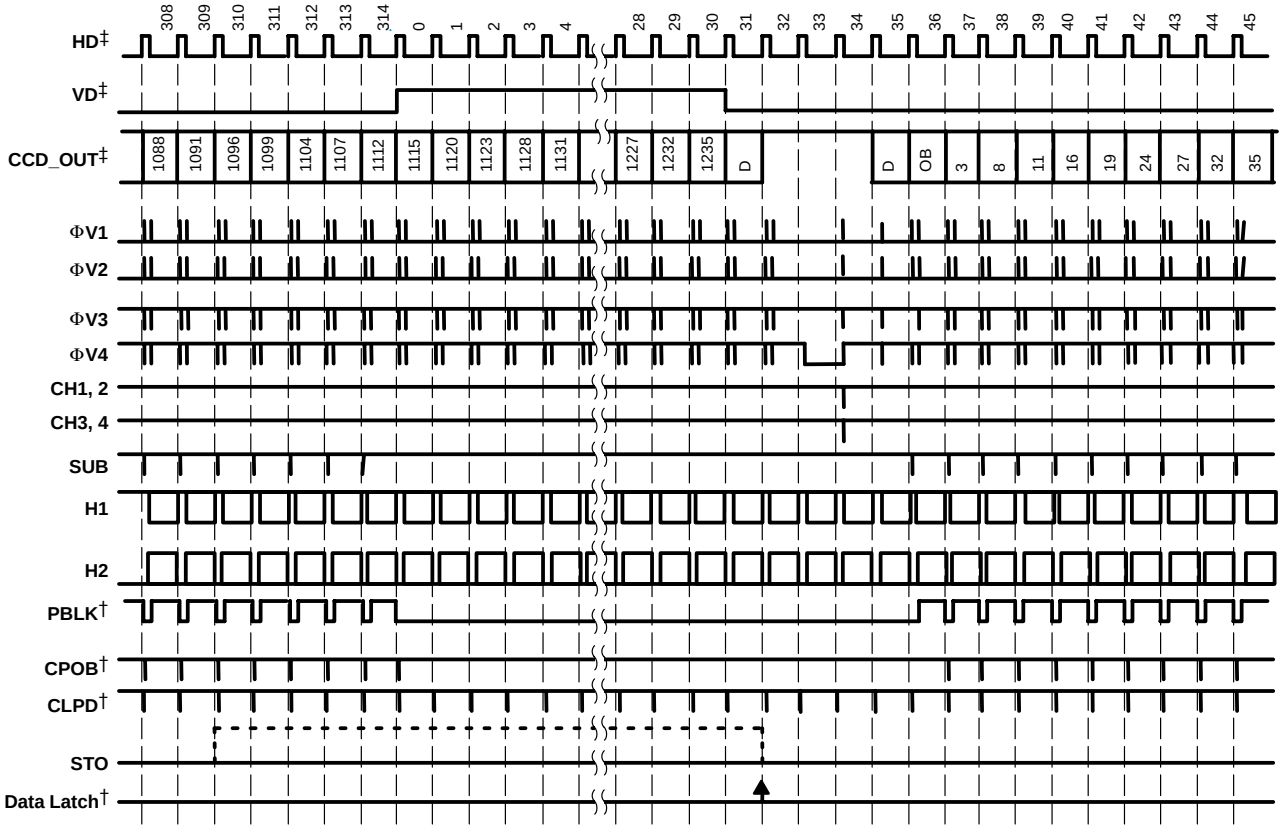

† Internal Use
‡ External Input

4.14 Vertical Rate Timing (for 2A CCD) [frame mode—still function—odd field]

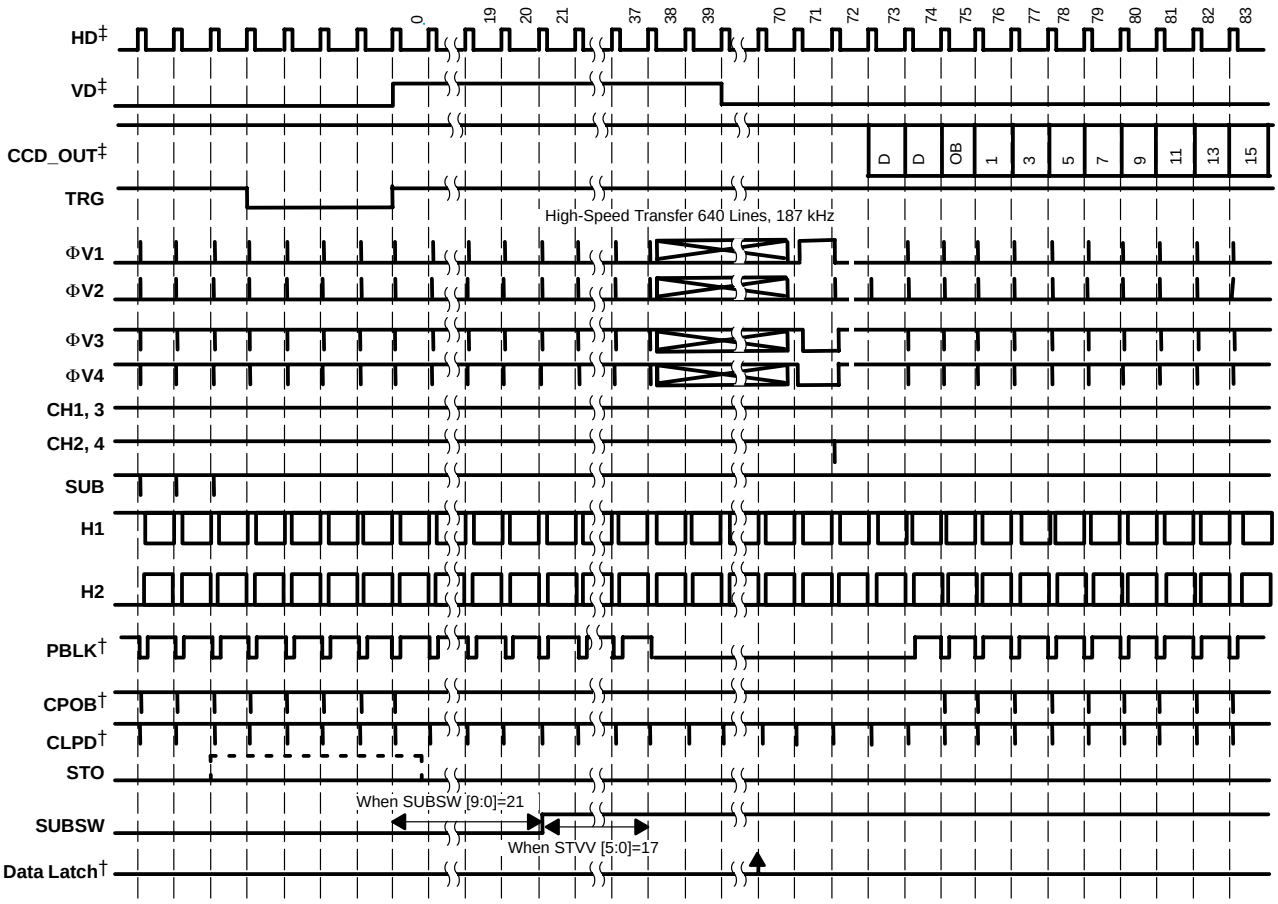

† Internal Use
‡ External Input

4.15 Vertical Rate Timing (for 2A CCD) [frame mode—still function—even field]

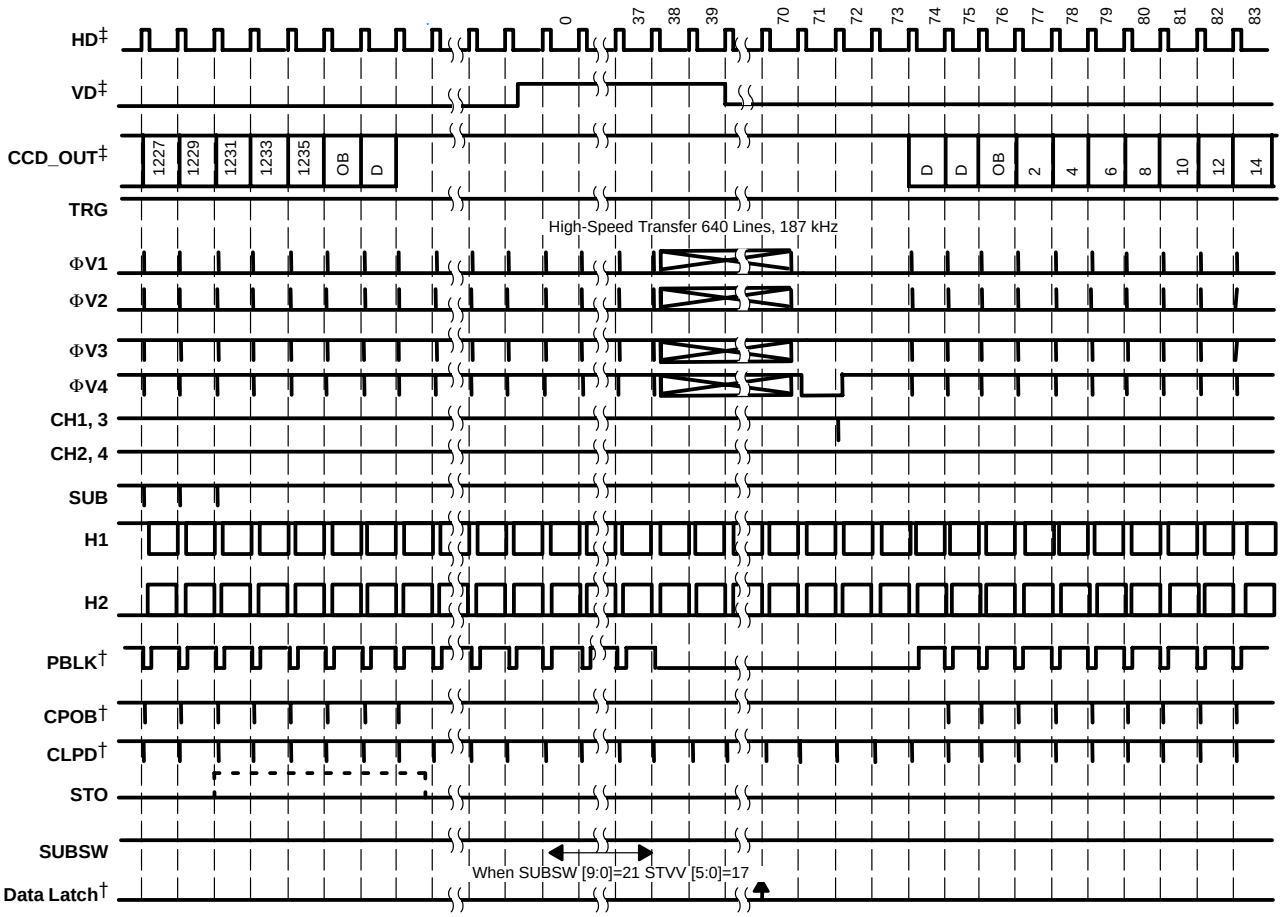

† Internal Use
‡ External Input

4.16 Vertical Rate Timing (for 2A CCD) [frame mode—still function turnoff]

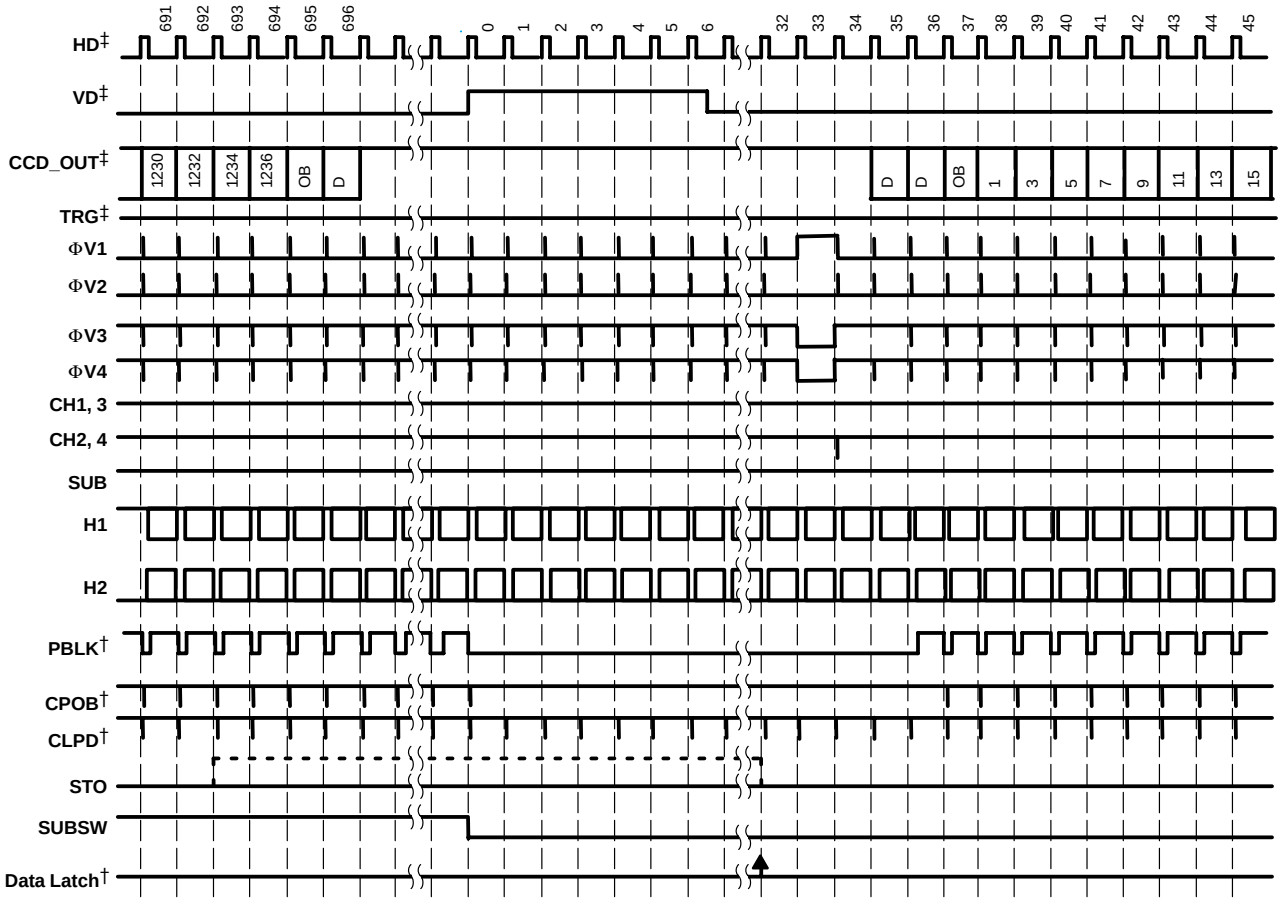

† Internal Use
‡ External Input

4.17 Vertical Rate Timing (for 2A CCD) [field mode—e-zoom function—odd field]

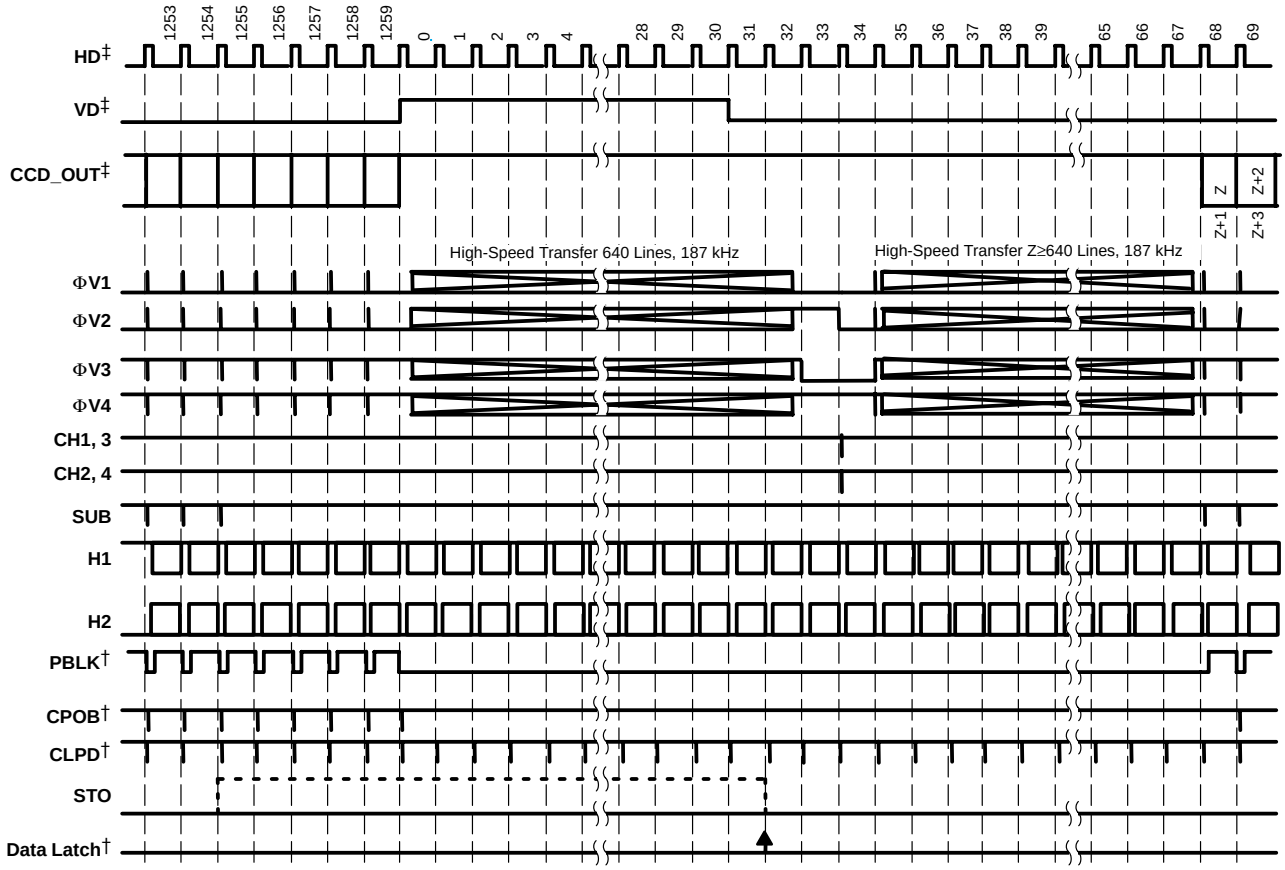

NOTE: After readout, number (EZ) of lines high-speed transfer and CCD output line address, Z = (EZ – 3) ×2.

† Internal Use

‡ External Input

4.18 Vertical Rate Timing (for 2A CCD) [field mode—e-zoom function—even field]

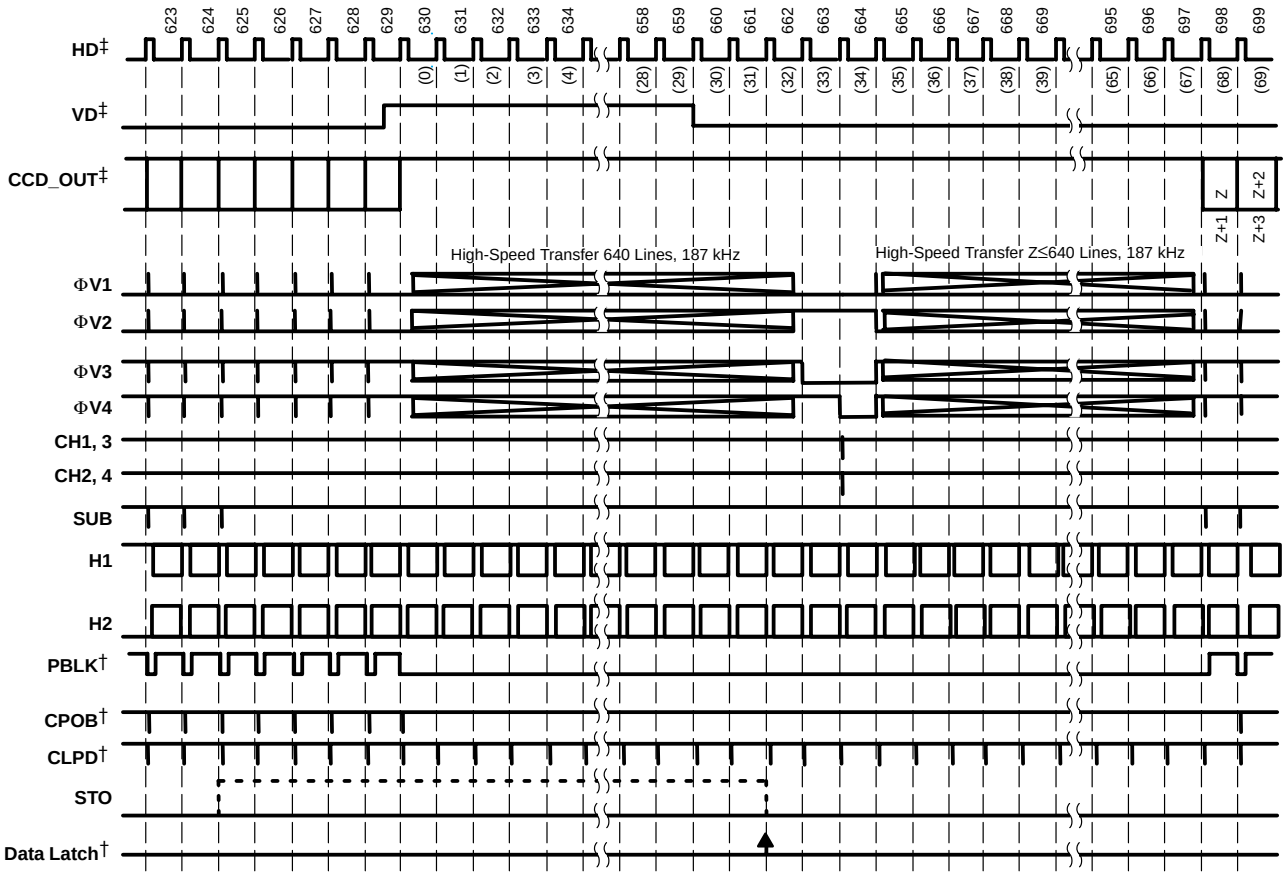

NOTE: After readout, number (EZ) of lines high-speed transfer and CCD output line address, Z = (EZ – 3) ×2.

† Internal Use

‡ External Input

4.19 Vertical Rate Timing (for 2A CCD) [×2 monitor mode—e-zoom function]

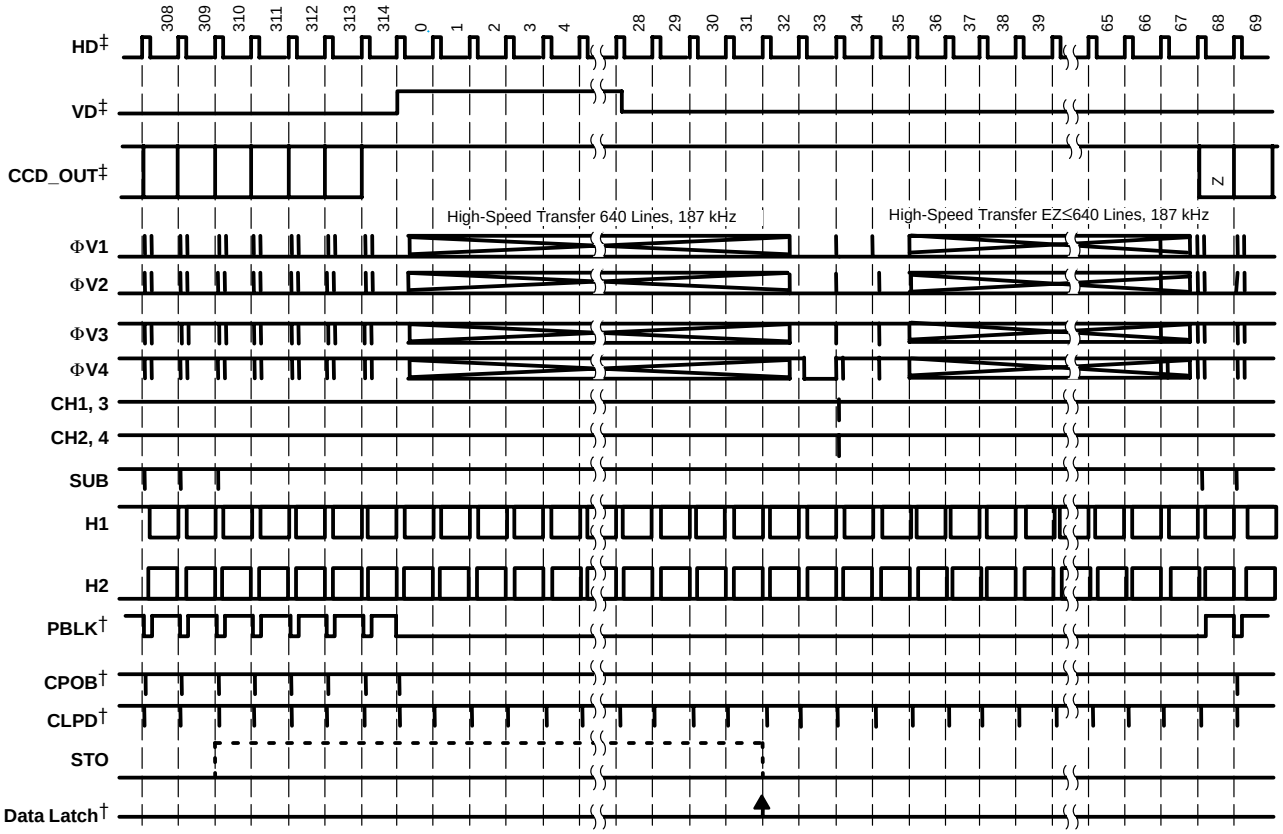

NOTE: After readout, number (EZ) of lines high-speed transfer and CCD output line address, (If EZ/2 = even, Z = EZ/4–1)×8+3.
If EZ/2=odd, Z = (EZ–2)2)

† Internal Use

‡ External Input

4.20 Horizontal Timing Chart (for 2B CCD)

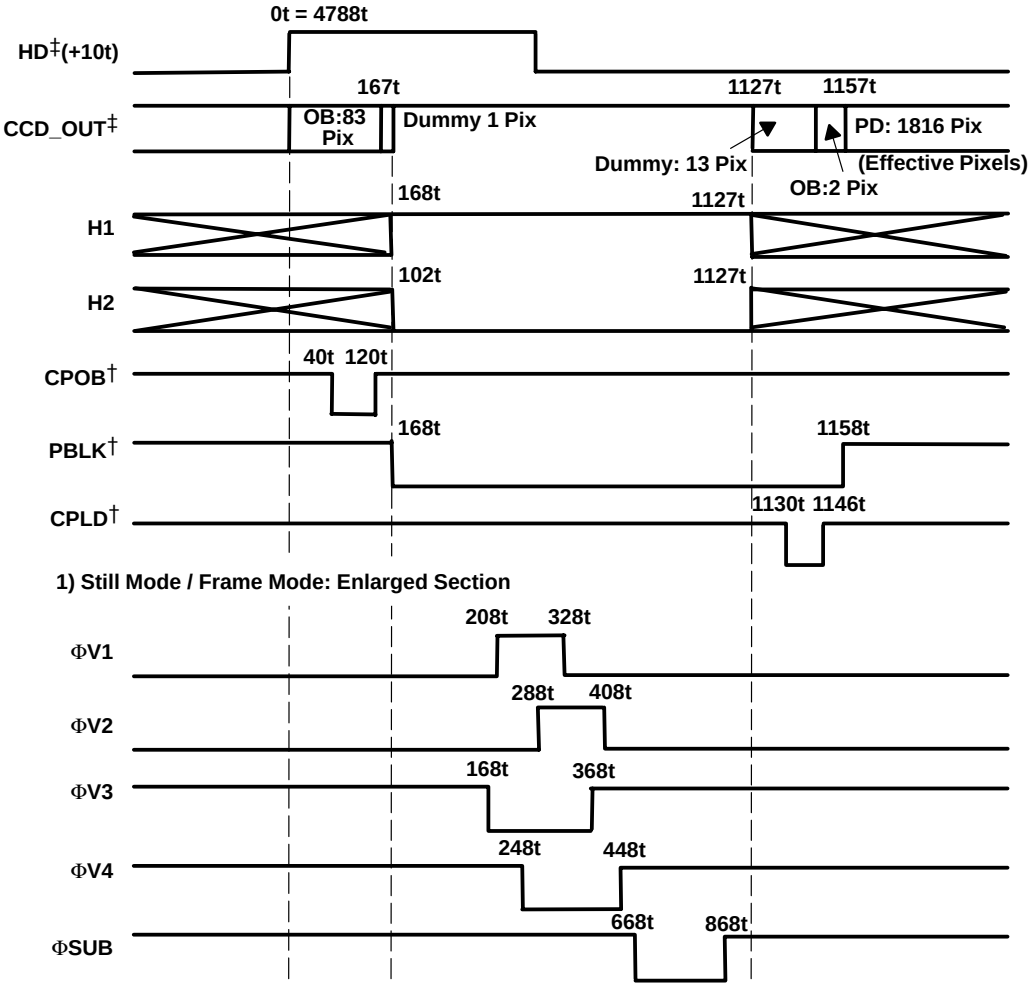

† Internal Use
‡ External Input

4.20 Horizontal Timing Chart (for 2B CCD) (continued)

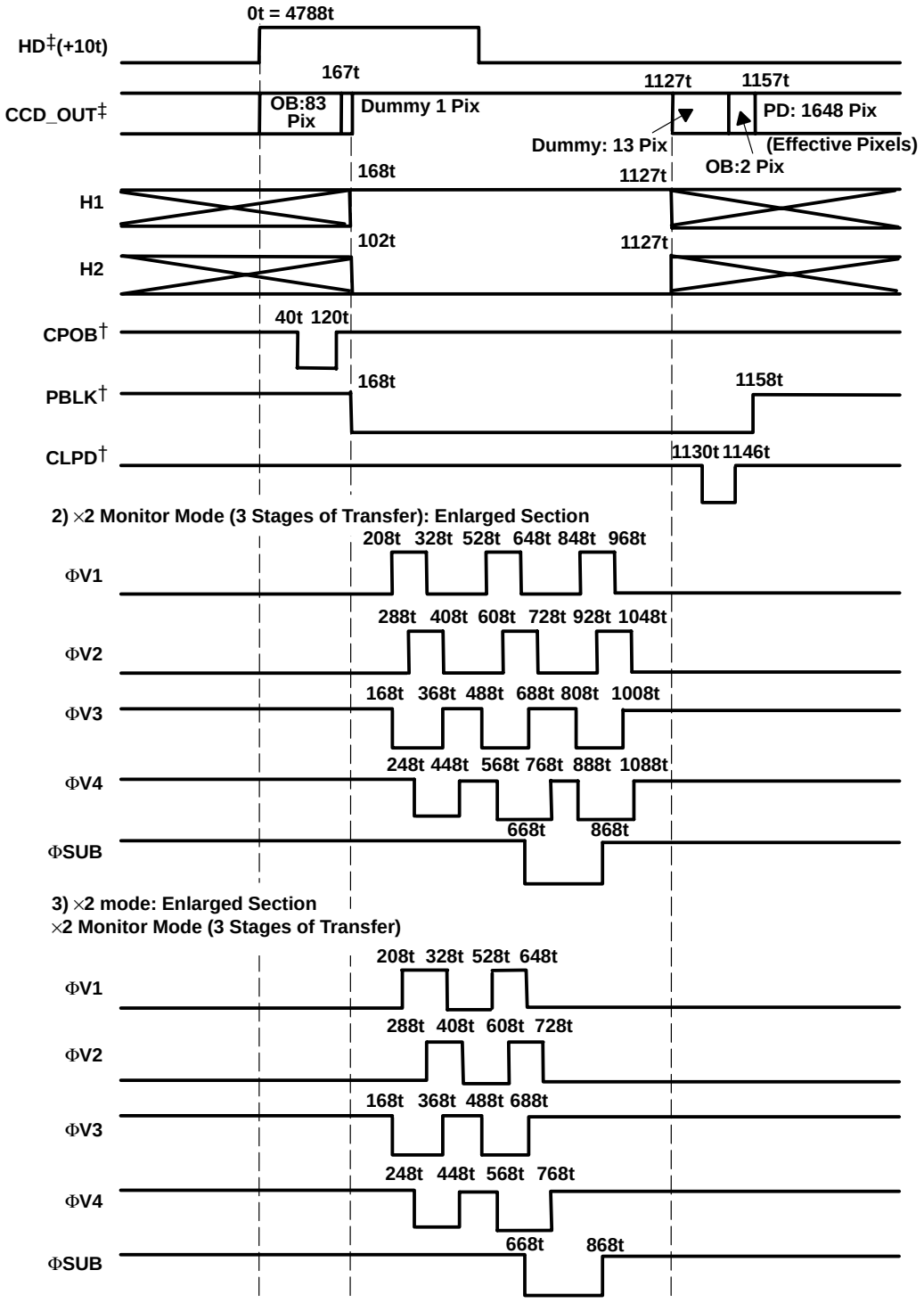

† Internal Use
‡ External Input

4.21 Vertical Timing Chart (for 2B CCD)

1) V-Rate Readout Detailed Timing Chart: (Field Mode, Odd Field)

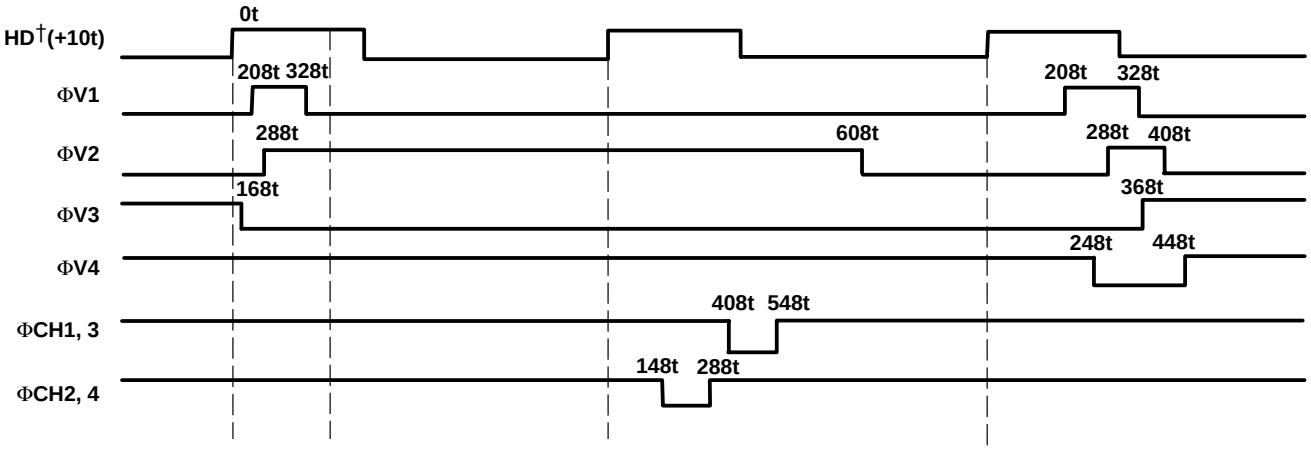

2) V-Rate Readout Detailed Timing Chart: (Field Mode, Even Field)

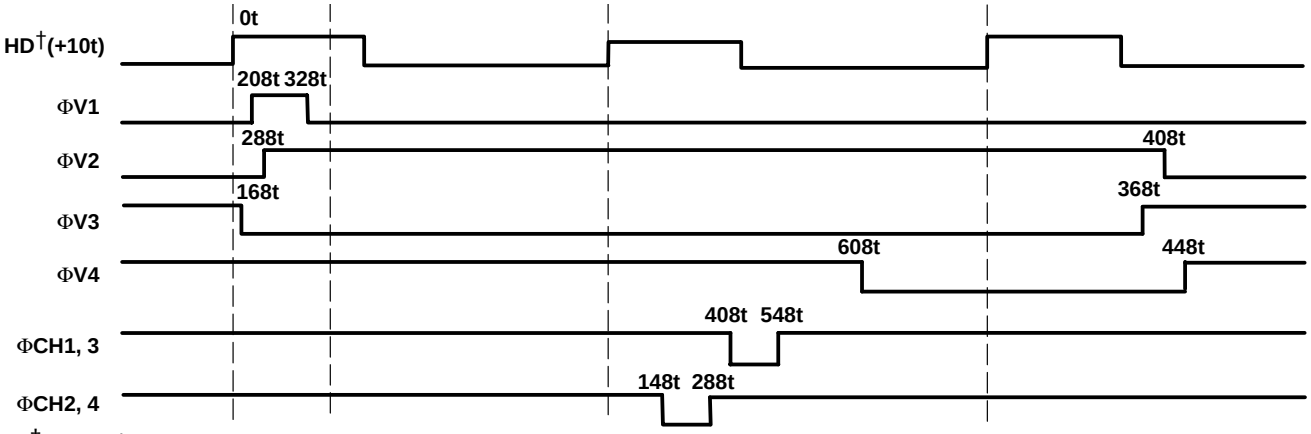

† External Input

4.21 Vertical Timing Chart (for 2B CCD) (continued)

1) V-Rate Readout Detailed Timing Chart: (Frame Mode, Odd Field)

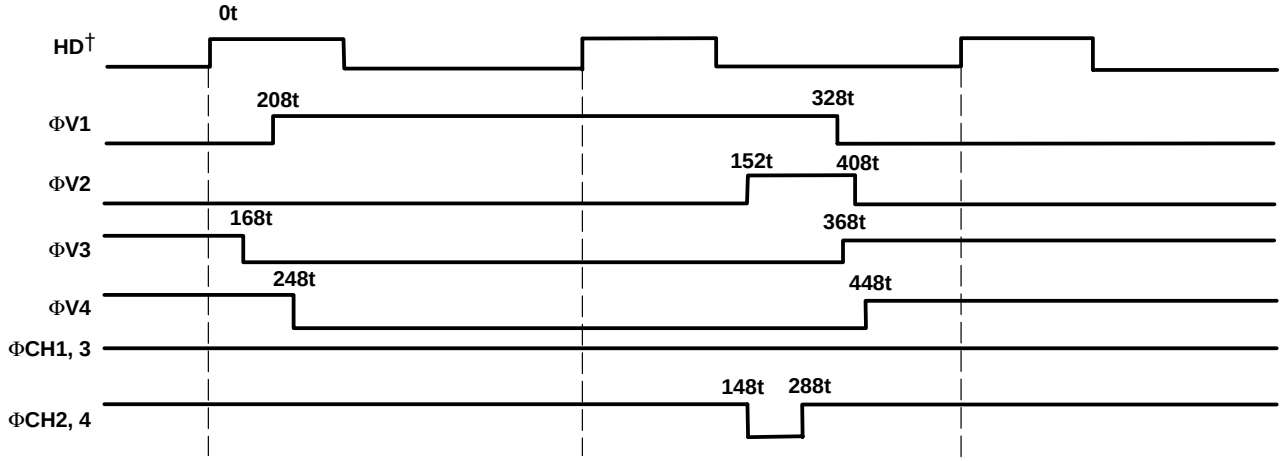

2) V-Rate Readout Detailed Timing Chart: (Frame Mode, Even Field)

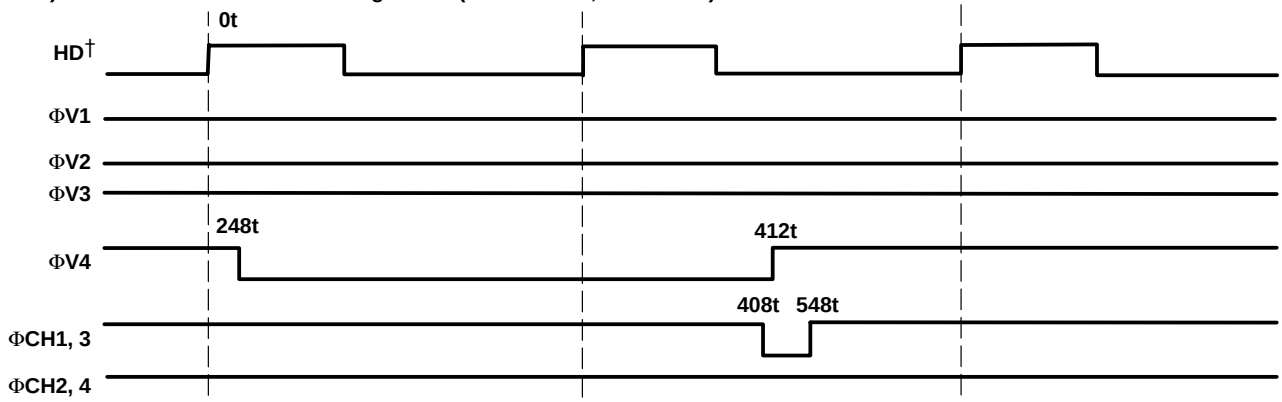

† External Input

4.21 Vertical Timing Chart (for 2B CCD) (continued)

1) V-Rate Readout Detailed Timing Chart: (×2 Mode, Odd Field)

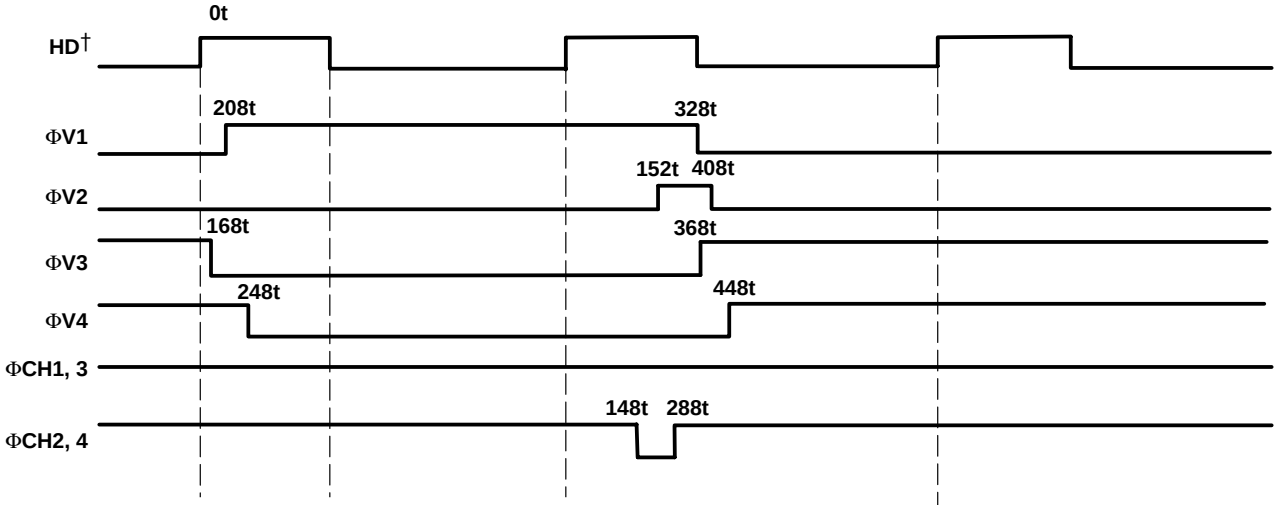

2) V-Rate Readout Detailed Timing Chart: (×2 Mode, Even Field)

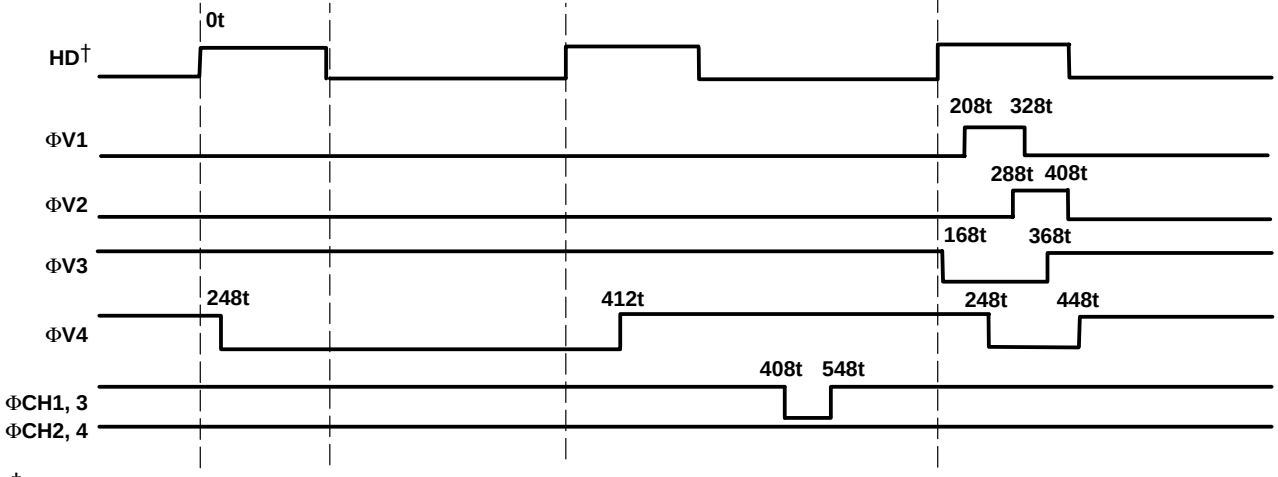

† External Input

4.21 Vertical Timing Chart (for 2B CCD) (continued)

1) V-Rate Readout Detailed Timing Chart: (×2 Monitor Mode)

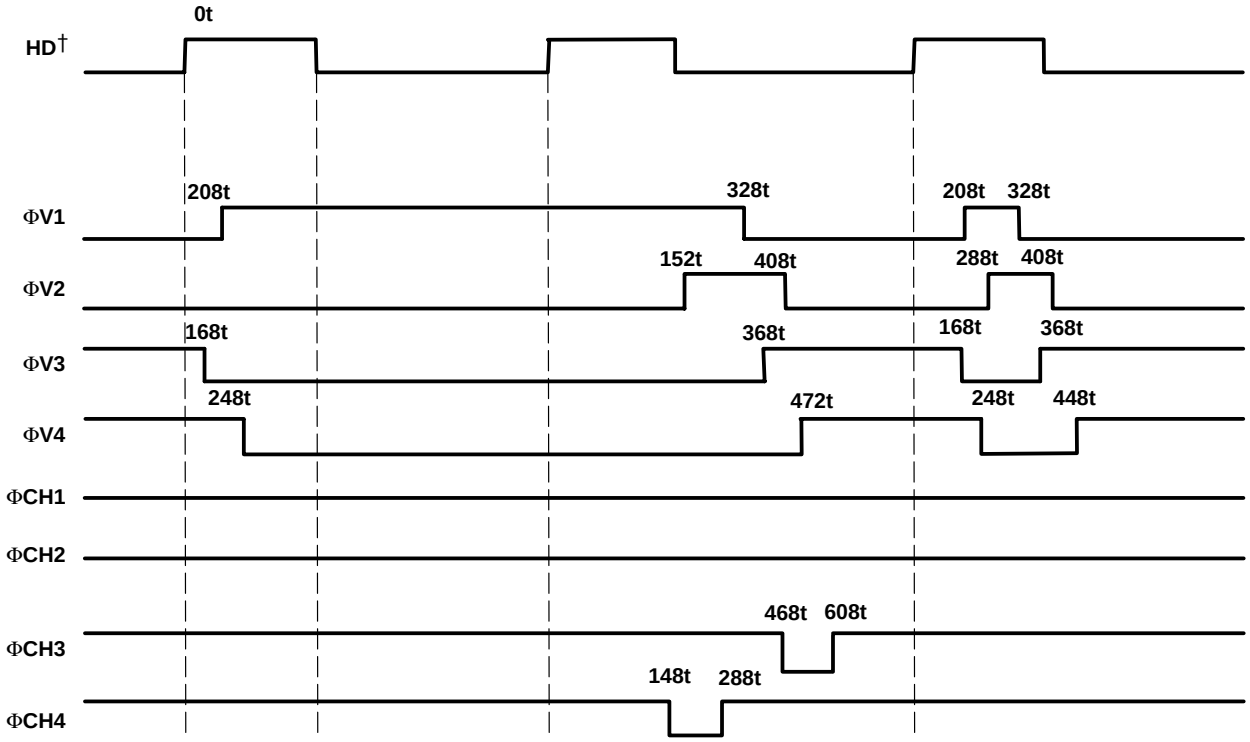

† External Input

4.22 Vertical High-Speed Transfer Timing Chart (for 2B CCD)

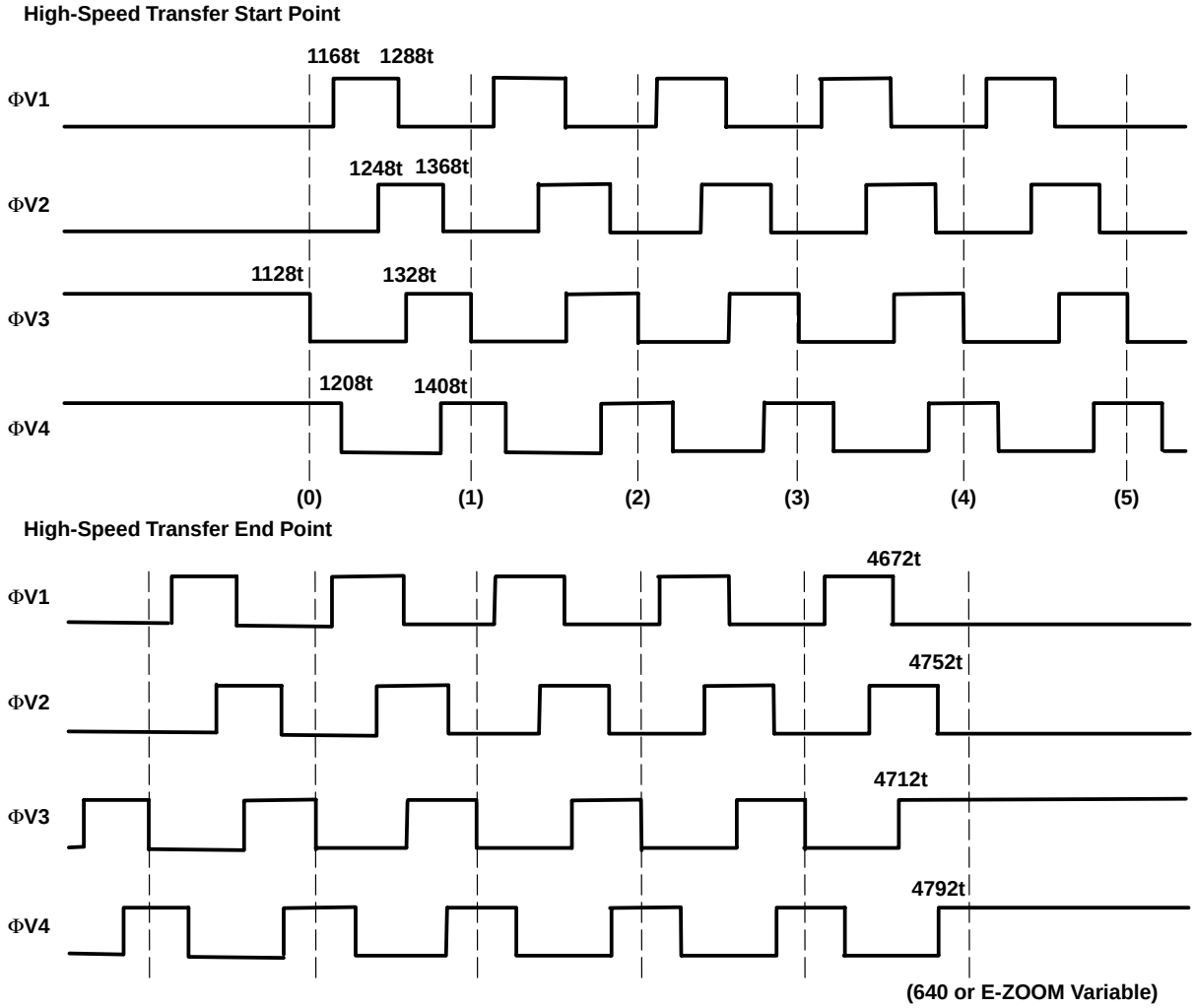

4.23 Vertical Rate Timing (for 2B CCD) [field mode—odd field]

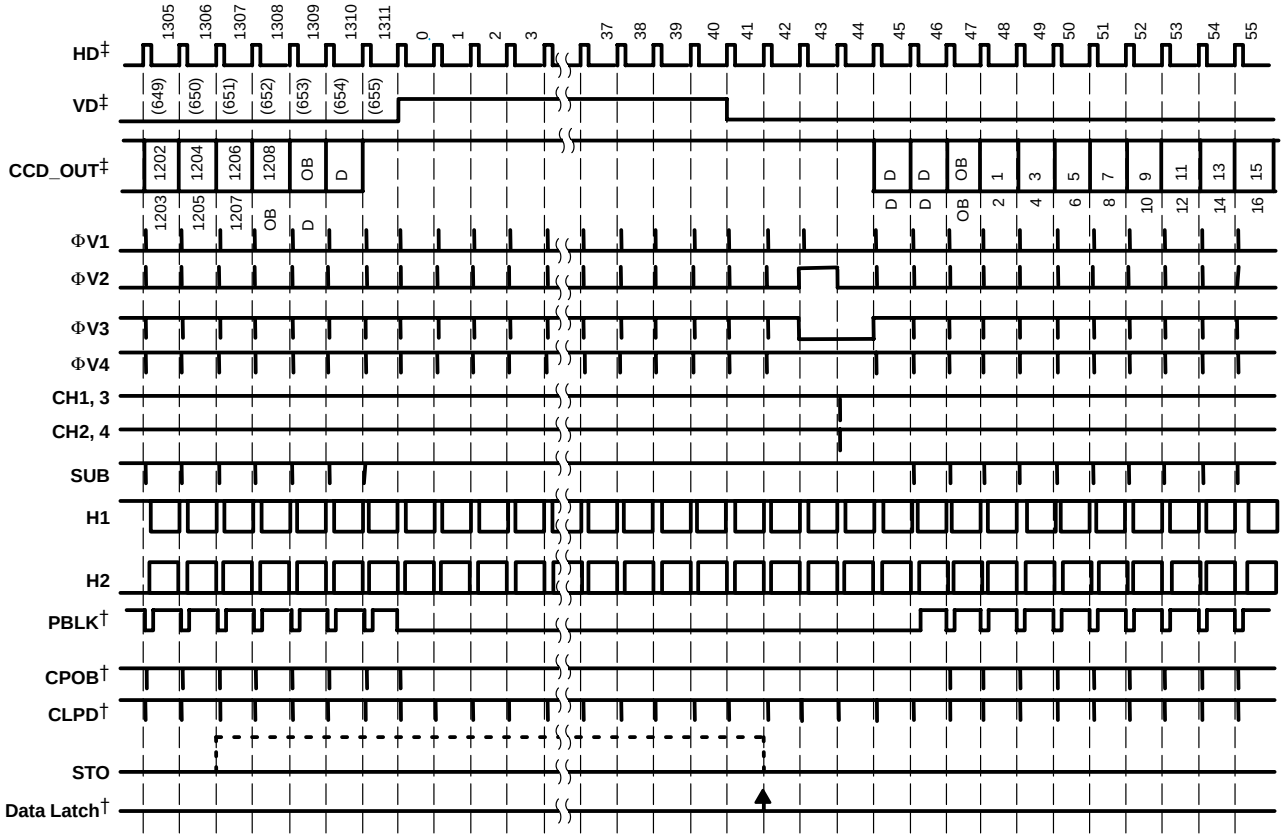

† Internal Use
‡ External Input

4.24 Vertical Rate Timing (for 2B CCD) [field mode—even field]

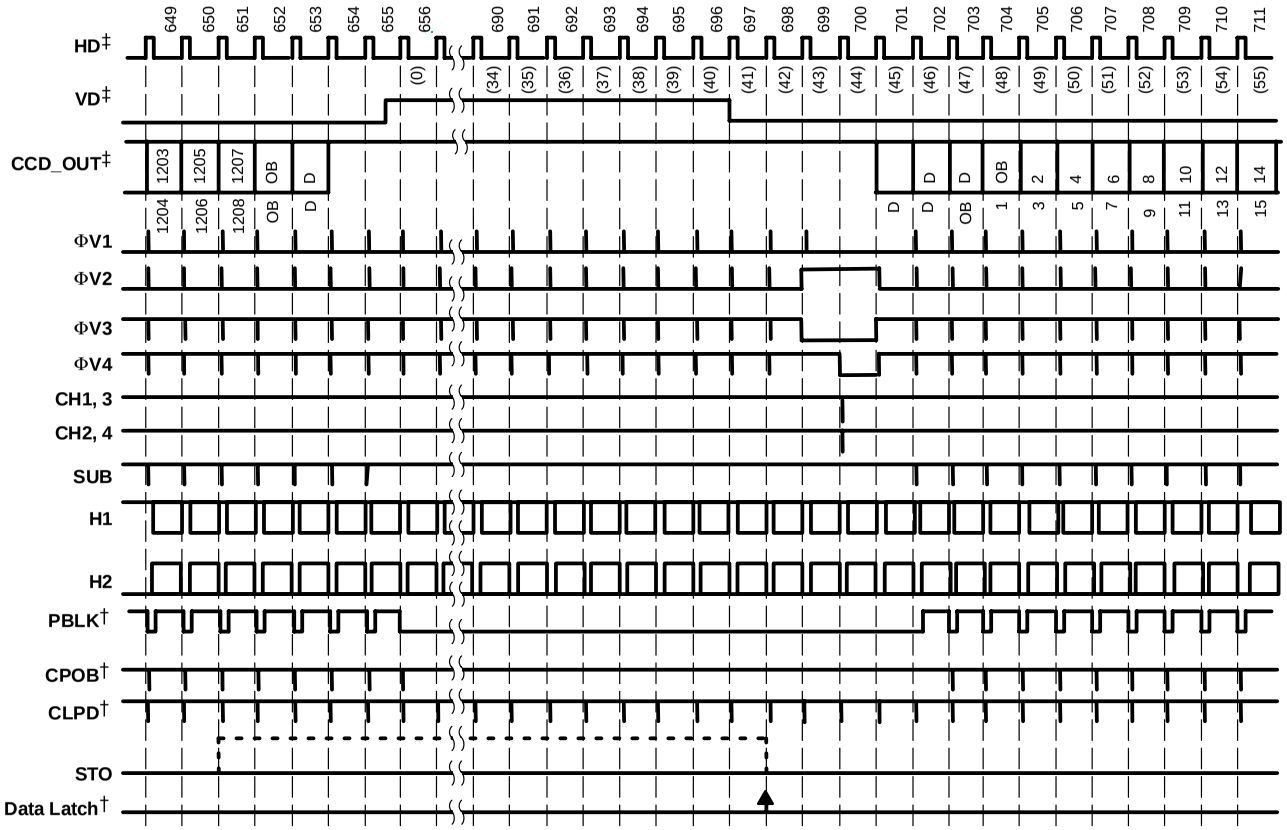

† Internal Use
‡ External Input

4.25 Vertical Rate Timing (for 2B CCD) [frame mode—odd field]

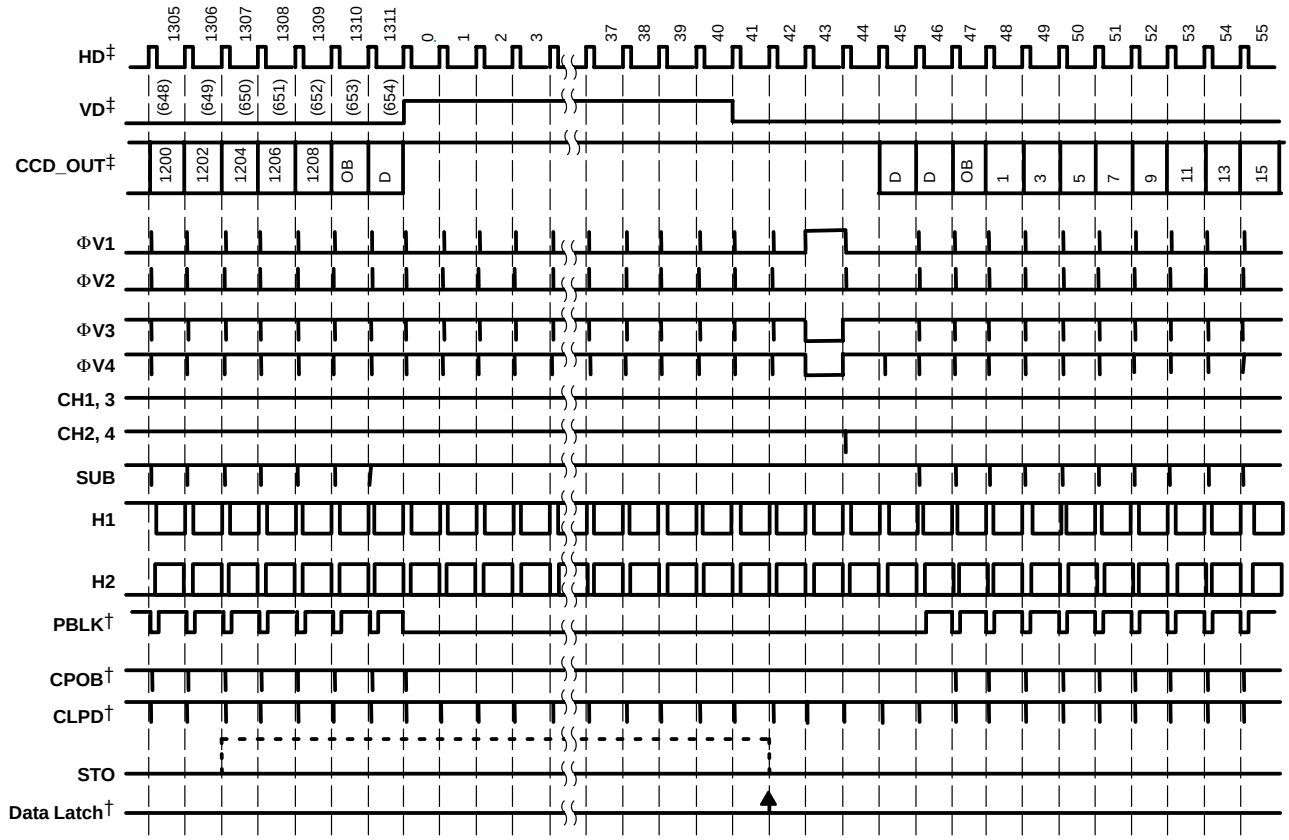

† Internal Use
‡ External Input

4.26 Vertical Rate Timing (for 2B CCD) [frame mode—even field]

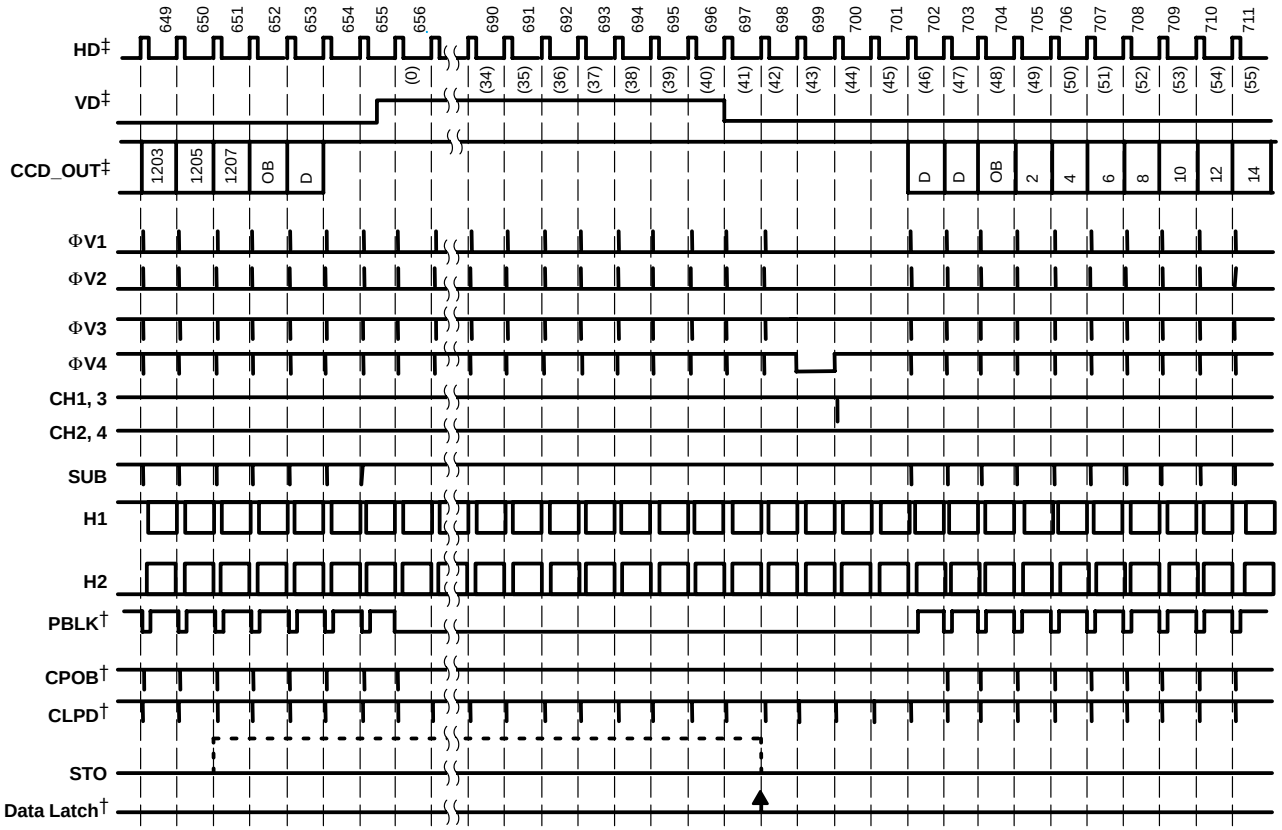

† Internal Use
‡ External Input

4.27 Vertical Rate Timing (for 2B CCD) [×2 mode—odd field]

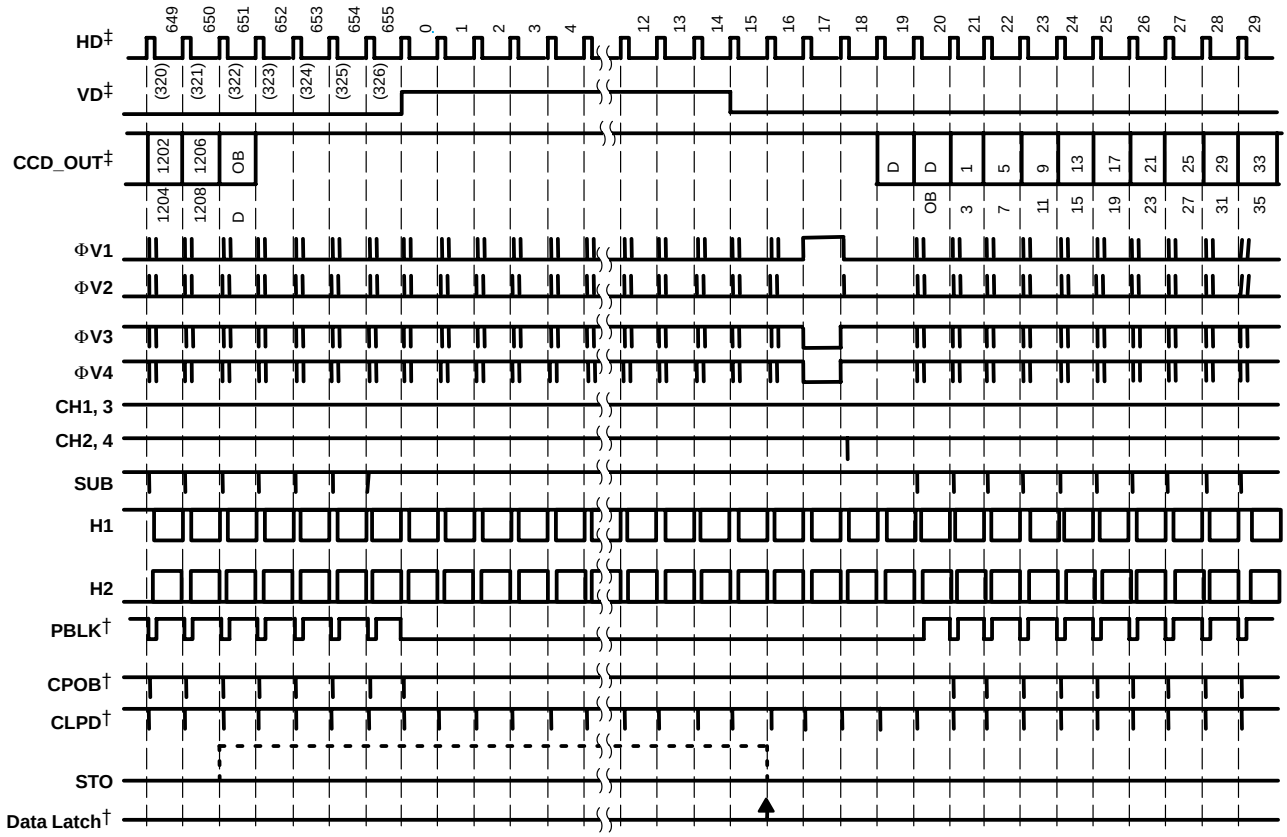

† Internal Use
‡ External Input

4.28 Vertical Rate Timing (for 2B CCD) [×2 mode—even field]

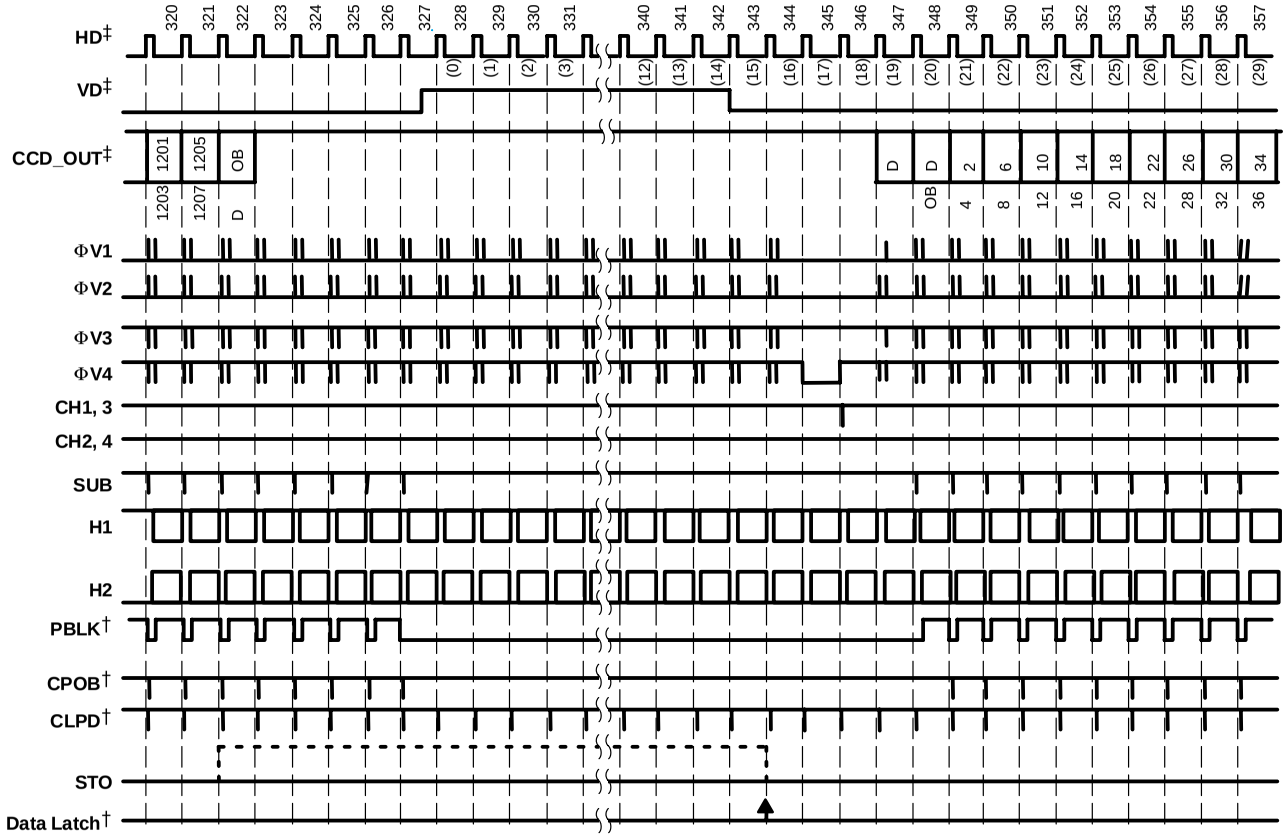

† Internal Use
‡ External Input

4.29 Vertical Rate Timing (for 2B CCD) [×2 monitor mode]

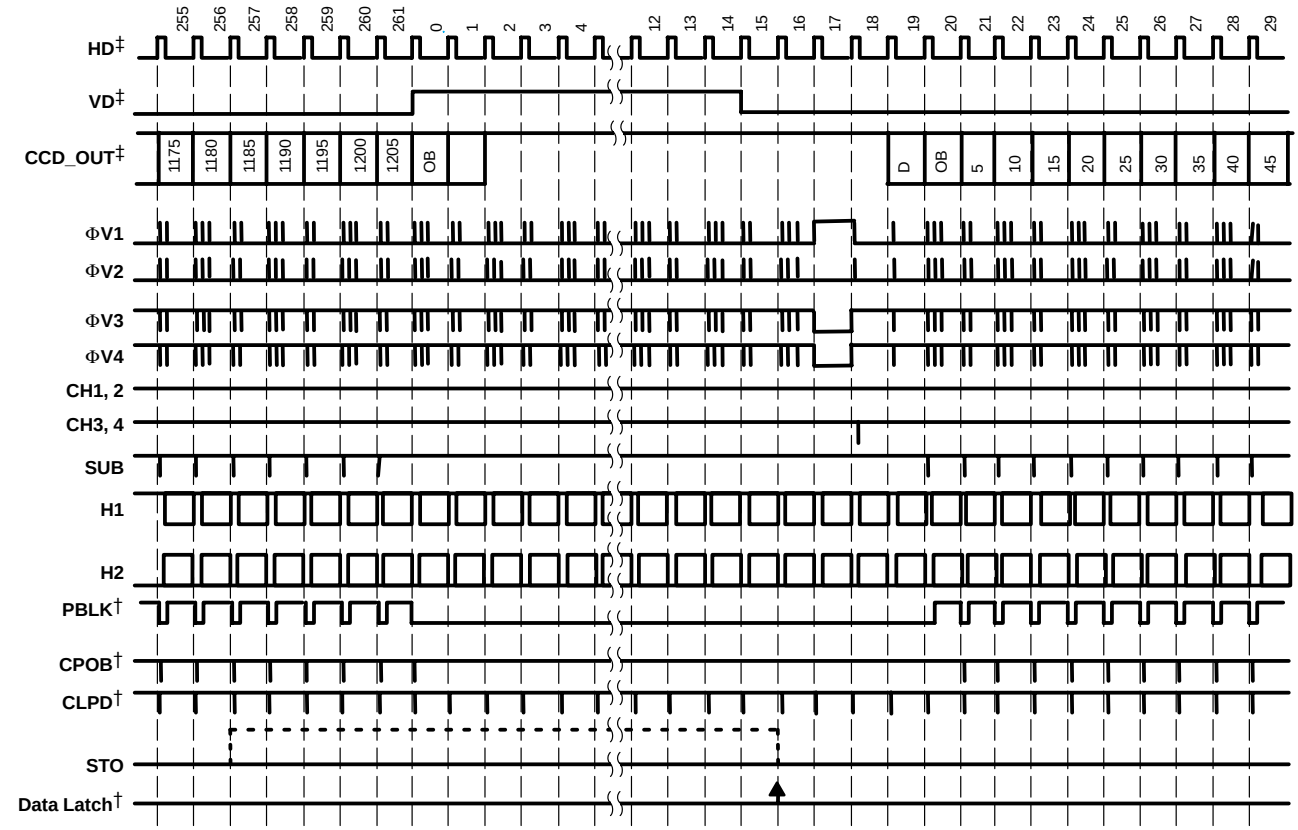

† Internal Use
‡ External Input

4.30 Vertical Rate Timing (for 2B CCD) [frame mode—still function—odd field]

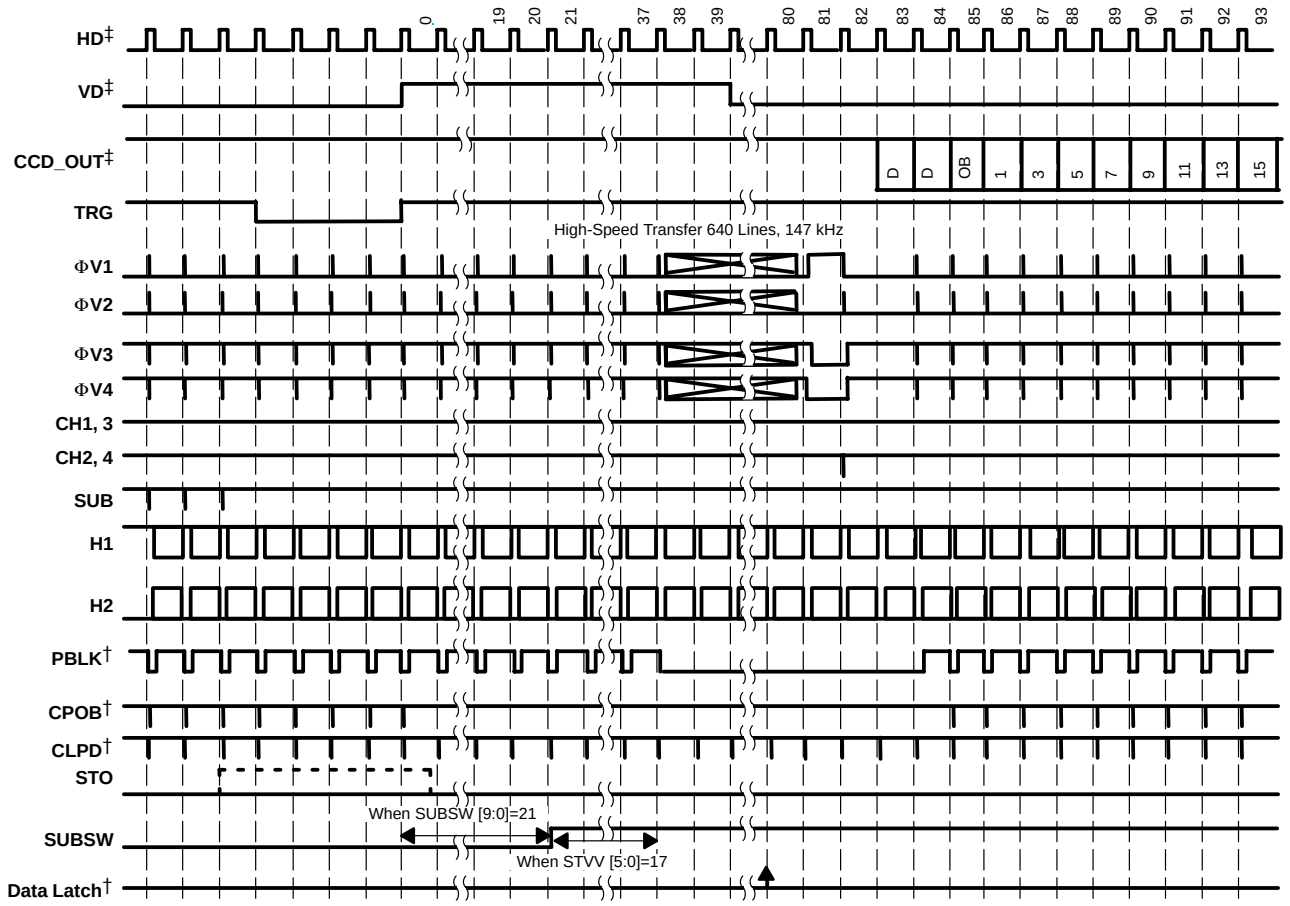

† Internal Use
‡ External Input

4.31 Vertical Rate Timing (for 2B CCD) [frame mode—still function—even field]

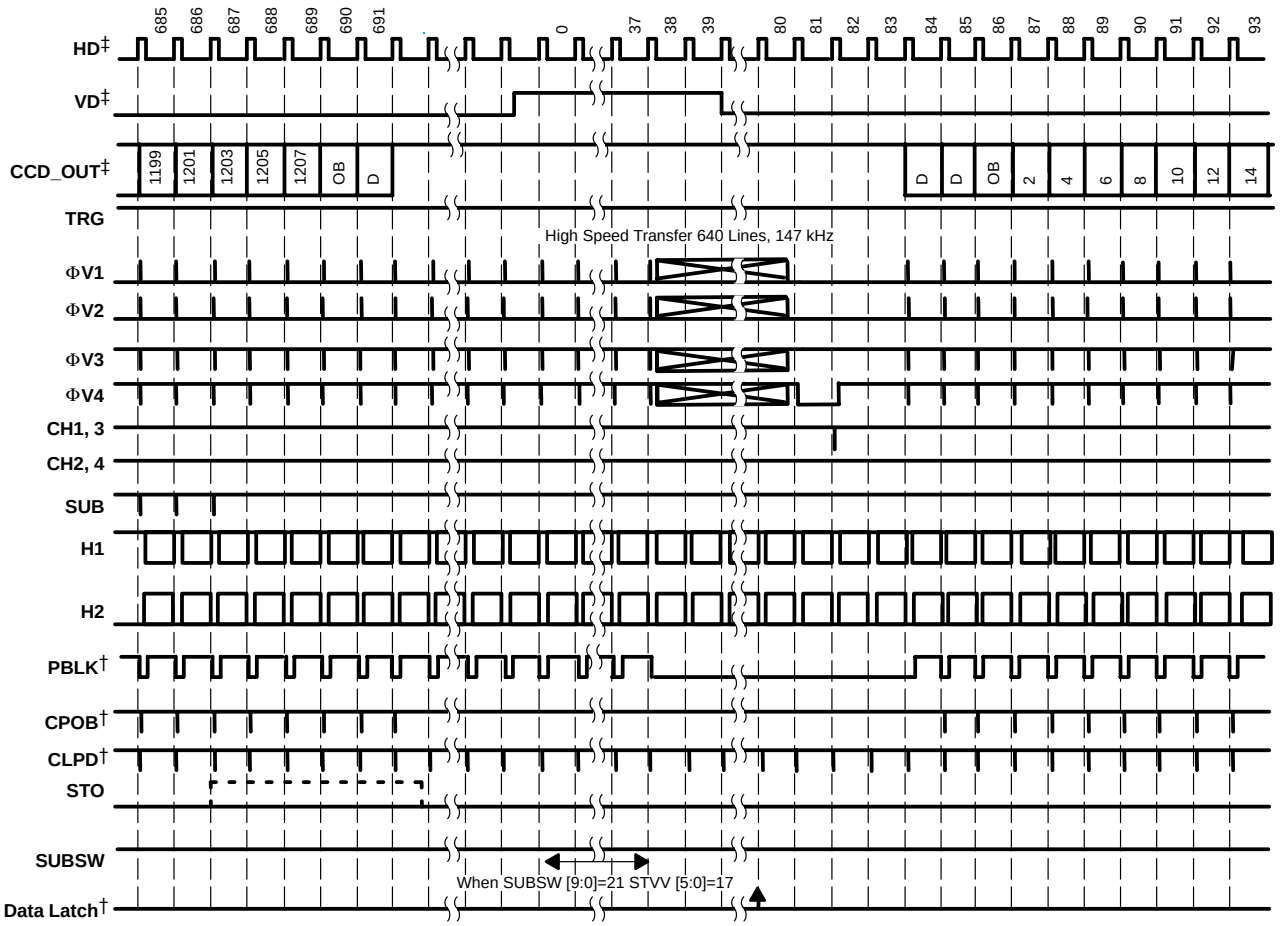

† Internal Use
‡ External Input

4.32 Vertical Rate Timing (for 2B CCD) [frame mode—still function turnoff]

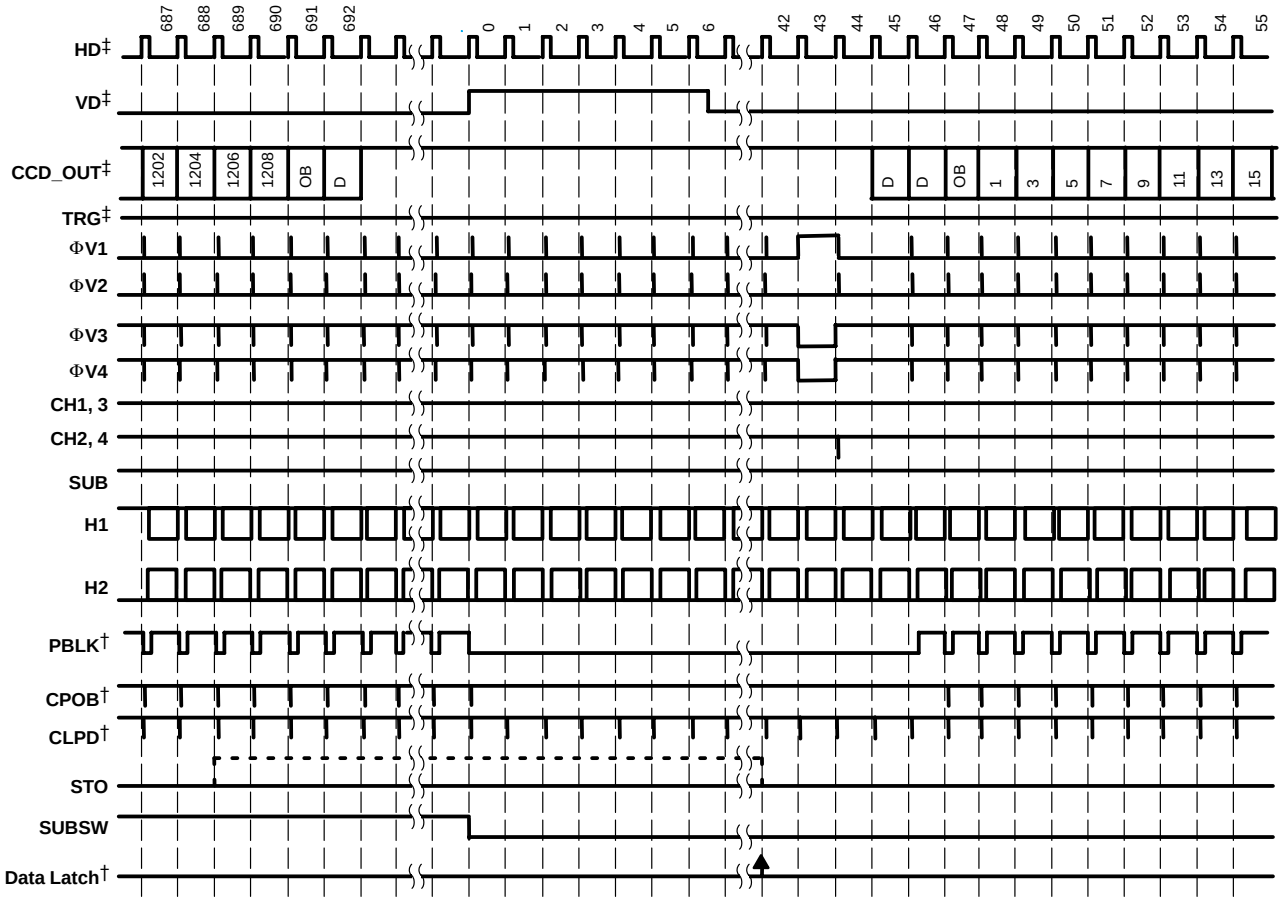

† Internal Use
‡ External Input

4.33 Vertical Rate Timing (for 2B CCD) [field mode—e-zoom function—odd field]

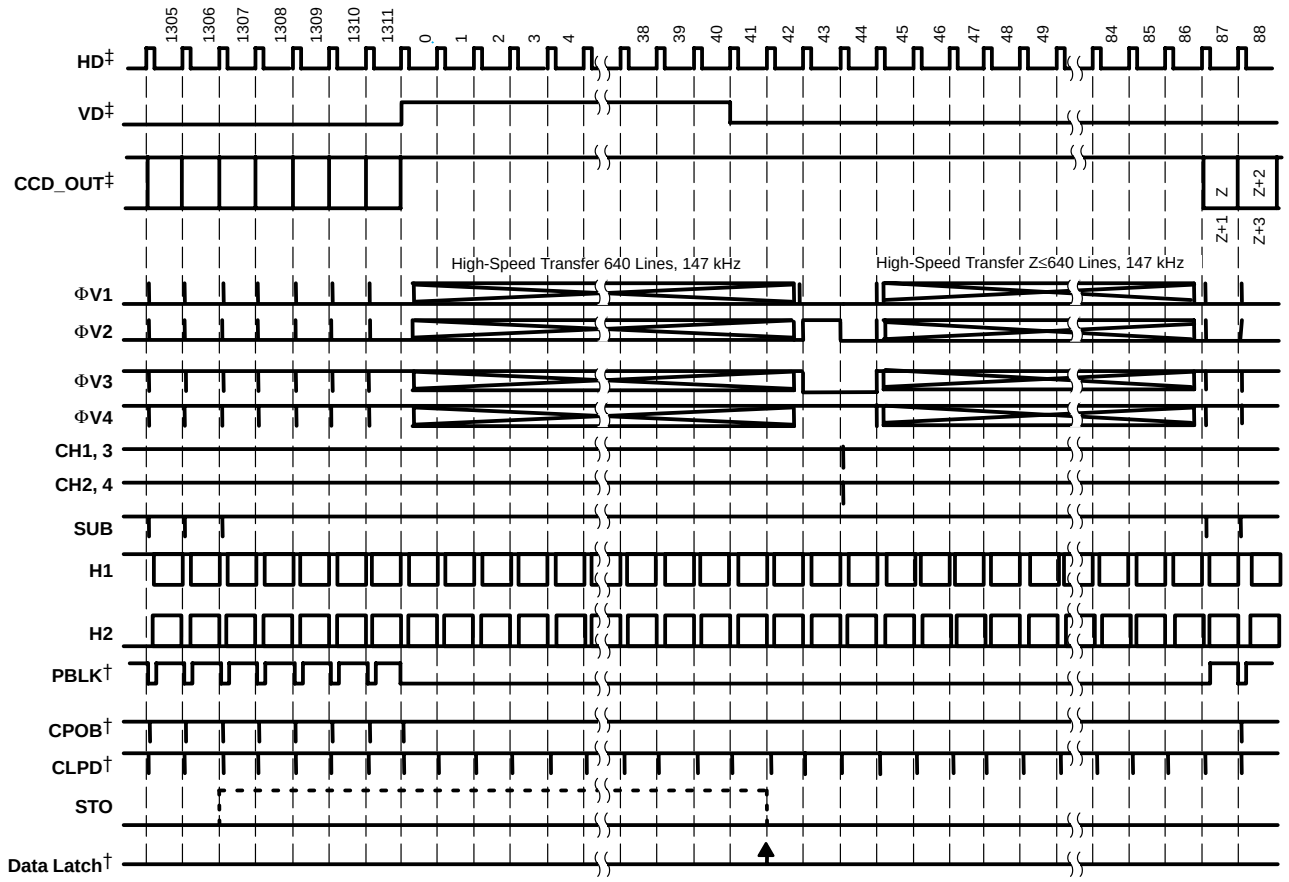

NOTE: After readout, number (EZ) of lines high-speed transfer and CCD output line address, Z = (EZ – 3) ×2.

† Internal Use

‡ External Input

4.34 Vertical Rate Timing (for 2B CCD) [field mode—e-zoom function—even field]

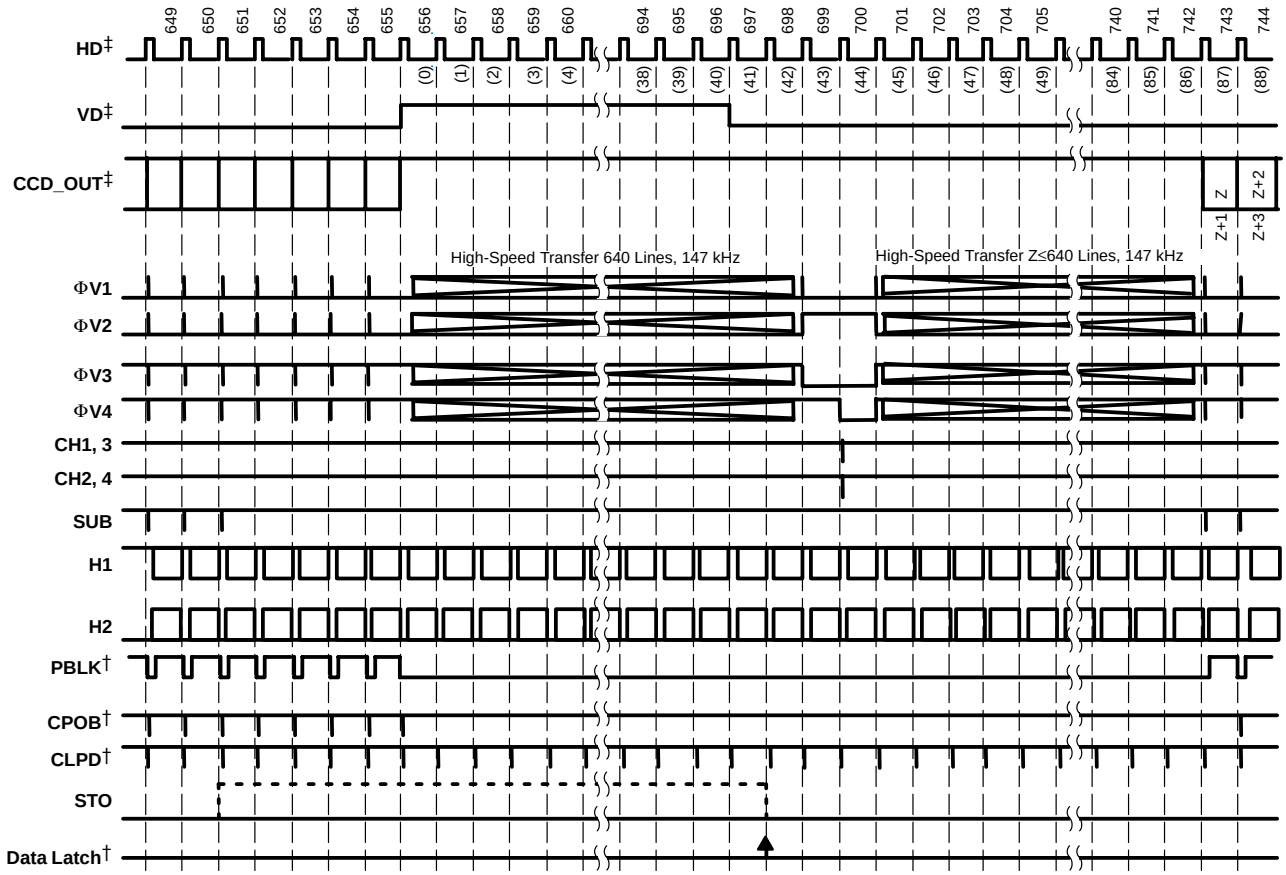

NOTE: After readout, number (EZ) of lines high-speed transfer and CCD output line address, Z = (EZ – 4) ×2 + 1.

† Internal Use

‡ External Input

4.35 Vertical Rate Timing (for 2B CCD) [×2 monitor mode—e-zoom function]

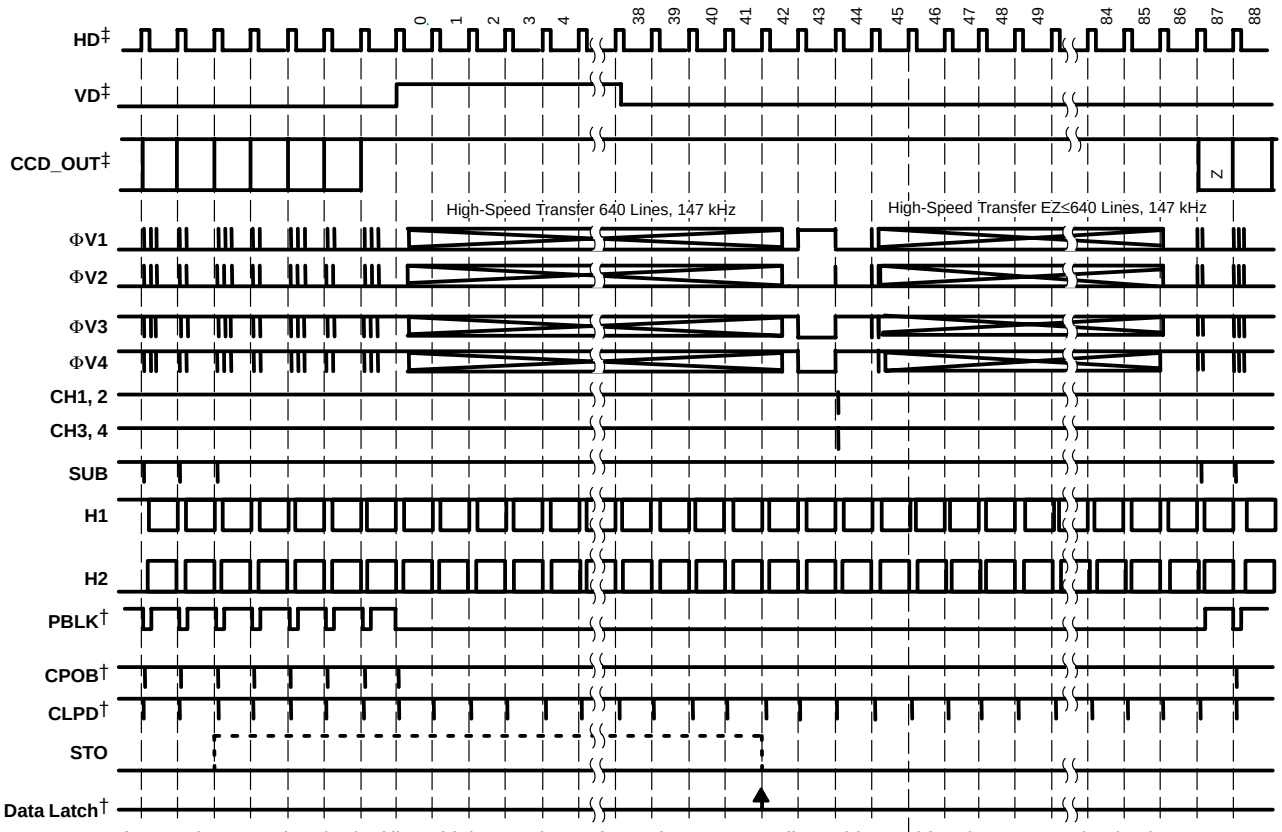

NOTE: After readout, number (EZ) of lines high speed transfer and CCD output line address, (If EZ/2=even, Z=(EZ/4-1)×8+3. If EZ/2=odd, Z = (EZ-2)2).

† Internal Use

‡ External Input

5 Electrical Characteristics

5.1 Absolute Maximum Ratings Over Operating Free-Air Temperature Range (unless otherwise noted)†

Supply voltage, VDD . . . . . 4 V
Supply voltage differences, VDD . . . . . ±0.1 V
Ground voltage differences, VSS . . . . . ±0.1 V
Digital input voltage . . . . . –0.3 V to (VDD + 0.3 V)
Analog input voltage . . . . . –0.3 V to (VCC + 0.3 V)
Input current (any pins except supplies) . . . . . ±10 mA
Ambient temperature under bias . . . . . –25°C to 85°C
Storage temperature . . . . . –55°C to 125°C
Junction temperature . . . . . 150°C
Package temperature (IR reflow, peak) . . . . . 250°C

† Stresses beyond those listed under “absolute maximum ratings” may cause permanent damage to the device. These are stress ratings only, and functional operation of the device at these or any other conditions beyond those indicated under “recommended operating conditions” is not implied. Exposure to absolute-maximum-rated conditions for extended periods may affect device reliability.

5.2 Electrical Characteristics, All Specifications at T_A = 25°C, All Power Supply Voltages = 3 V, and Conversion Rate = 20 MHz (unless otherwise noted)

PARAMETER		TEST CONDITIONS	VSP2267GSJ			UNIT
			MIN	TYP	MAX	
	Resolution			12		Bits
	Conversion rate		12		25	MHz
	Clock rate		24		50	MHz
DIGITAL INPUTS						
	Logic family			CMOS		
V_{T+}	Input voltage	LOW to HIGH threshold voltage		1.7		V
V_{T-}		HIGH to LOW threshold voltage		1.0		
I_{IH}	Input current	Logic HIGH, V_{IN} = 3 V			±20	µA
I_{IL}		Logic LOW, V_{IN} = 0 V			±20	
	Input capacitance			5		pF
	Maximum input voltage		–0.3		5.3	V
DIGITAL OUTPUTS (DATA)						
	Logic family			CMOS		
	Logic coding			Straight binary		
V_{OH}	Output voltage	Logic HIGH, I_{OH} = –2 mA	2.4			V
V_{OL}		Logic LOW, I_{OL} = 2 mA			0.4	
	Additional output data delay	J[1:0] = 00		0		ns
		J[1:0] = 01		5		
		J[1:0] = 10		10		
		J[1:0] = 11		13		

5.2 Electrical Characteristics, All Specifications at T_A = 25°C, All Power Supply Voltages = 3 V, and Conversion Rate = 20 MHz (unless otherwise noted) (continued)

PARAMETER	TEST CONDITIONS	VSP2267GSJ			UNIT
		MIN	TYP	MAX	
H-DRIVER OUTPUTS					
Output voltage (SUB)	Logic HIGH (V_{OH}) I_{OH} = –0.85 mA	VDD–0.6			V
	Logic LOW (V_{OL}) I_{OL} = 0.85 mA			0.4	
Output voltage (V1...V4, CH1...CH4, STO, CLKO, SUBSW)	Logic HIGH (V_{OH}) I_{OH} = –1.7 mA	VDD–0.6			V
	Logic LOW (V_{OL}) I_{OL} = 1.7 mA			0.4	
Output voltage (R)	Logic HIGH (V_{OH}) I_{OH} = –0 mA	VDD–0.05			V
	Logic HIGH (V_{OH}) I_{OH} = –6.8 mA	VDD–0.6			
	Logic LOW (V_{OL}) I_{OL} = 6.8 mA			0.4	
Output voltage (H1, H2)	Logic HIGH (V_{OH}) I_{OH} = –0 mA	VDD–0.05			V
	Logic HIGH (V_{OH}) I_{OH} = –13.6 mA	VDD–0.6			
	Logic LOW (V_{OL}) I_{OL} = 13.6 mA			0.4	
TP output voltage (SHP, SHD, ADCCK, CLPD, CPOB, PBLK)	Logic HIGH (V_{OH}) I_{OH} = –1.7 mA	VDD–0.6			V
	Logic LOW (V_{OL}) I_{OL} = 1.7 mA			0.4	
REFERENCE					
Positive reference voltage			1.75		V
Negative reference voltage			1.25		V
ANALOG INPUT (CCDIN)					
Input signal level for full-scale out	PGA gain = 0 dB	900			mV
Input capacitance			15		pF
Input limit		–0.3		3.3	V
TRANSFER CHARACTERISTICS					
Differential nonlinearity (DNL)	PGA gain = 0 dB		±0.5		LSB
Integral nonlinearity (INL)	PGA gain = 0 dB		±1		LSB
No missing codes			Specified		
Step response settling time	Full-scale step input		1		pixel
Overload recovery time	Step input from 1.8 V to 0 V		2		pixels
Data latency			9 (fixed)		Clock cycles
Signal-to-noise ratio (see Note 1)	Grounded input cap, PGA gain = 0 dB		79		dB
	Grounded input cap, Gain = 12 dB		67		
CCD offset correction range		–180		200	mV
INPUT CLAMP					
Clamp-on resistance			400		Ω
Clamp level			1.5		V
PROGRAMMABLE GAIN AMP (PGA)					
Gain control resolution			10		Bits
Maximum gain	Gain code = 11 1111 1111		42		dB
High gain	Gain code = 11 0100 1000		34		dB
Medium gain	Gain code = 10 0010 0000		20		dB
Low gain	Gain code = 00 1000 0000		0		dB
Minimum gain	Gain code = 00 0000 0000		–6		dB
Gain control error			±0.5		dB

NOTE 1: SNR = 20 log (full-scale voltage/rms noise)

5.2 Electrical Characteristics, All Specifications at T_A = 25°C, All Power Supply Voltages = 3 V, and Conversion Rate = 20 MHz (unless otherwise noted) (continued)

PARAMETER		TEST CONDITIONS	VSP2267GSJ			UNIT
			MIN	TYP	MAX	
OPTICAL BLACK CLAMP LOOP						
	Control DAC resolution			10		Bits
	Optical black clamp level	Programmable range of clamp level	0		240	LSB
		OBCLP level at CODE = 1000		130		
	Minimum output current for control DAC	COB terminal		±0.15		µA
	Maximum output current for control DAC	COB terminal		±153		µA
	Loop time constant	C_{COB} = 0.1 µF		40.7		µs
	Slew rate	C_{COB} = 0.1 µF, Saturated output current of control DAC		1530		V/s
POWER SUPPLY						
VCC	Supply voltage		3.0	3.3	3.6	V
	Power dissipation (AFE)	Normal operation mode: no CCD load (at 3 V and 20 MHz)		80		mW
	Power dissipation (TG+H, R driver)			58		
	Power dissipation (total) without CCD load			138		
	Power dissipation (total)	Standby plus power-save mode:(at 3 V and 20 MHz)		34		mW
		Master clock-off mode: (at 3 V)		6		mW
TEMPERATURE RANGE						
	Operation temperature		–25		85	°C
θ_{JA}	Thermal resistance			37		°C/W

6 Mechanical Data

GSJ (S-PBGA-N96) PLASTIC BALL GRID ARRAY

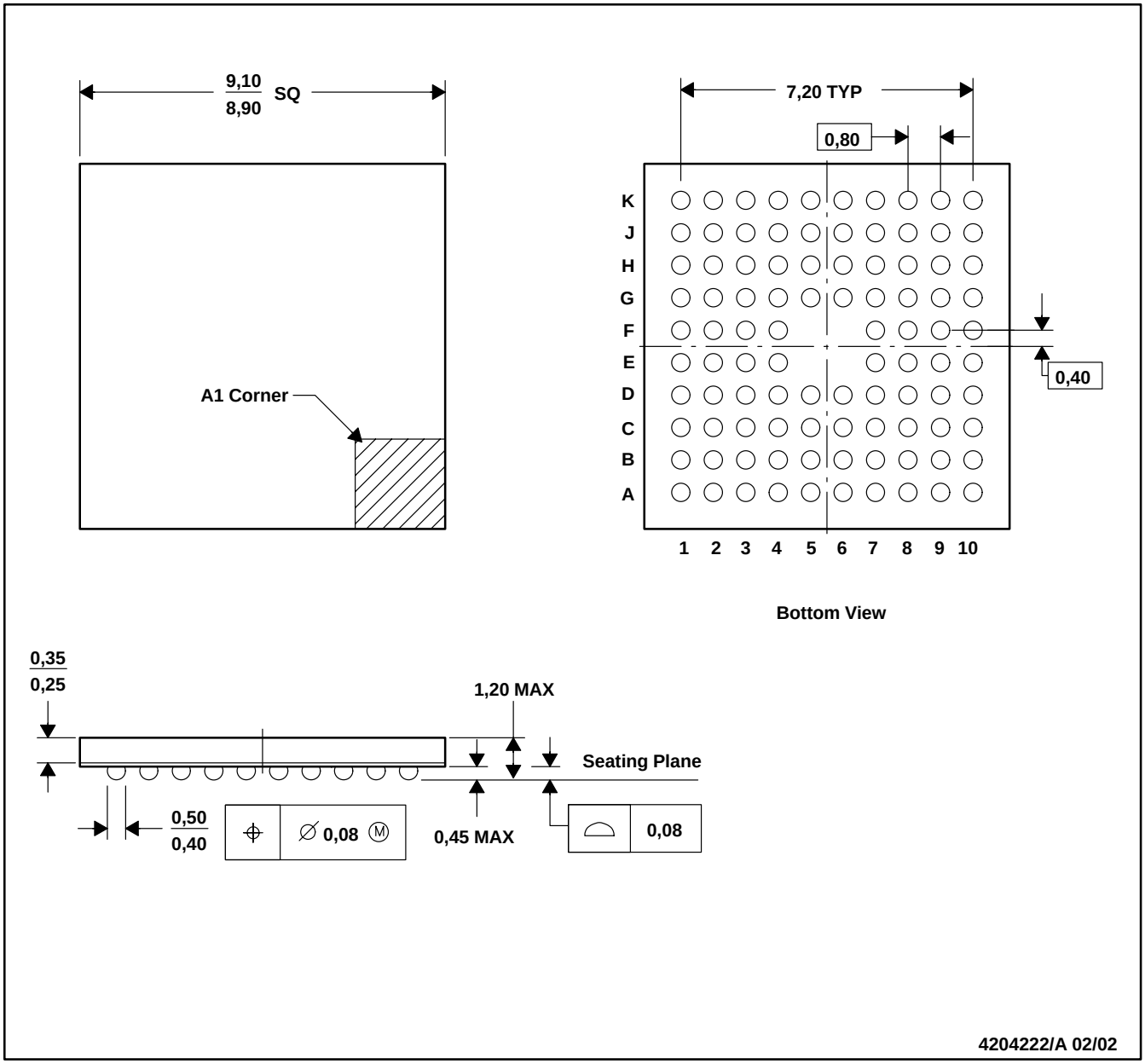

NOTES: A. All linear dimensions are in millimeters.
B. This drawing is subject to change without notice.
C. MicroStar Junior™ package configuration.
D. Fall within JEDEC MO-225.

MicroStar Junior is a trademark of Texas Instruments.